z/OS Communications Server
3.2

ACF/TAP Trace Analysis Handbook

GC27-3645-70

Note:

Before using this information and the product it supports, be sure to read the general information under "Notices" on page 247.

This edition applies to 3.1 of z/OS® (5655-ZOS), and to subsequent releases and modifications until otherwise indicated in new editions.

Last updated: 2025-09-20

© Copyright International Business Machines Corporation 2000, 2025.
US Government Users Restricted Rights – Use, duplication or disclosure restricted by GSA ADP Schedule Contract with IBM Corp.

Contents

Figures vii

Tables xi

About this document xiii
- Who should read this document xiii
- How this document is organized xiii
- How to use this document xiii
  - How to provide feedback to IBM xiv
- Conventions and terminology that are used in this information xiv
- How to read a syntax diagram xvi
- Prerequisite and related information xviii

Summary of changes xxiii
- Summary of changes for z/OS 3.2 xxiii
- Changes made in z/OS Communications Server 3.1 xxiii

Chapter 1. ACF/TAP and trace data 1
- Trace facilities 1
- Trace data processed by ACF/TAP 1
  - Traces not processed by ACF/TAP 2
  - How ACF/TAP supports GPT data 2
- Trace data references and output reports 3
  - NCP-collected line trace data on duplex lines 4
  - Trace data and control parameters 5
  - Gathering trace data information 5

Chapter 2. Gathering host-collected trace data 7
- NCP line traces 7
  - CSS line trace 8
  - NTRI line trace and NTRI IOH trace 9
  - Running the NCP line traces 10
- NCP transmission group trace 11
- Running the NCP transmission group trace 11
- NCP generalized PIU trace 12
- Running generalized path information unit trace 13
- VTAM buffer contents trace 13
  - Buffer save on PIUs that are out of sequence 13
  - Buffer lease verification 13
  - Buffer trace capture of NMVTs 13
  - Running the VTAM buffer contents trace 14
- Scanner interface trace 14
  - TIC internal trace 14
  - CSS adapter trace 15
  - Running the SIT, TIC internal trace, and CSS adapter trace 16

Chapter 3. Starting and running ACF/TAP 17
- ACF/TAP commands 17
- Running ACF/TAP 17

Entering commands and parameters....19

Chapter 4. ACF/TAP parameters....21
Parameter conventions....21
Output report parameters....21
Output report format....21
CSS adapter trace report (CAPRT)....22
CSS line trace report (CSPRT)....23
Frame-relay logical line trace summary report (FRPRT)....23
GPT index report (IXPRT)....23
GPT summary report (GSPRT)....24
LAN line trace report (NTPRT)....24
Line trace detail report (LDPRT)....25
Line trace summary report (LSPRT)....25
LUNAME cross-reference report (LUPRT)....26
Network data traffic report (DTPRT)....26
Network error report (NEPRT)....27
SNA detail report (SDPRT)....27
SNA summary report (SSPRT)....27
Summary report parameters (SYSPRINT/SYSLST)....28
VTAM internal trace report (VTPRT)....29
X.25 line trace report (NPPRT)....30
ACF/TAP control parameters....30
3746 Model 900 parameters....31
B-channel resource....34
CHARCODE parameter....34
CSATYPE parameter....35
DLCI parameter....40
INDEX parameter....41
INPUT parameter....41
LCN parameter....43
LINECNT parameter....43
LLN parameter....43
LOGADDR parameter....44
LONGPIU parameter....44
NCPNAME parameter....45
Node parameters....45
RRSUP parameter....48
S/EDATE and S/ETIME parameters....49
SOURCE parameter....51
START and END parameters....51
TIMEOUT parameter....52
TOSUP parameter....52
VIEW parameter....53
VIT parameters....53
WRAP parameter....54

Appendix A. Messages....57

Appendix B. ACF/TAP sample reports....167
Reporting ACF/TAP data using record numbers....167
CSS adapter trace reports....168
Communications line adapter PIU data sample report....173
CSS adapter with ECB flag sample report....175
ESCON data, CSS adapter trace sample report....175
Frame-relay data, CSS adapter trace sample report....177
ISDN data, CSS adapter trace sample report....178

Token-ring data, CSS adapter trace sample report....179
CSS line trace report....179
CSS line trace sample report....181
Frame-relay logical line trace summary report....181
Frame-relay logical line trace summary sample report....183
GPT index report....183
GPT index sample report....185
GPT summary report....185
GPT summary sample report....187
LAN line trace reports....187
ESS data, LAN line trace sample report....189
Frame-relay over token-ring data, LAN line trace sample report....190
NTRI logical data, LAN line trace sample report....190
NTRI physical and IP data, LAN line trace sample report....191
Token-ring with BNN HPR data, LAN line trace sample report....191
Line trace detail reports....192
ESS line trace, line trace detail sample report....196
Frame-relay logical data, line trace detail sample report....197
Frame-relay physical data, line trace detail sample report....198
Frame-relay physical with BNN data, line trace detail sample report....198
Frame-relay physical with BNN HPR data, line trace detail sample report....199
Frame-relay over token-ring data, line trace detail sample report....200
IP data, line trace detail sample report....200
IP over frame-relay data, line trace detail sample report....201
NCP line trace data, line trace detail sample report....202
NTRI line trace data, line trace detail sample report....203
Token-ring with BNN HPR data, line trace sample report....203
X.25 data, line trace detail sample report....204
Line trace summary reports....204
CSP data, line trace summary sample report....206
ESS line data, line trace summary sample report....206
Frame-relay physical data, line trace summary sample report....207
Frame-relay physical with BNN HPR data, line trace summary sample report....208
X.25 data, line trace summary sample report....208
LUNAME network address cross-reference report....209
LUNAME network address cross-reference sample report....210
Network data traffic report....210
VTAM full buffer trace data (LONGPIU=YES), network data traffic sample report....211
Network error report....212
Network error report sample....212
SNA detail reports....212
Communications line adapter PIU data SNA detail sample report....214
Frame-relay data, SNA detail sample report....215
Frame-relay with BNN HPR data, SNA detail sample report....216
FMH5, SNA detail sample report....216
NTO data, SNA detail sample report....216
SDLC with BNN HPR data, SNA detail sample report....217
Token-ring with BNN HPR data, SNA detail sample report....218
VTAM buffer trace data (alternate), SNA detail sample report....218
VTAM full buffer trace data (LONGPIU=YES), SNA detail sample report....220
SNA summary reports....220
Frame-relay data, SNA summary sample report....227
Frame-relay with BNN HPR data, SNA summary sample report....227
NCP line trace data, SNA summary sample report....228
NTO data sample report....228
SDLC with BNN HPR data sample report....229
TG trace data, SNA summary sample report....229
Token-ring with BNN HPR data, SNA summary sample report....230

VTAM buffer data (alternate), SNA summary sample report.....230
SYSPRINT reports.....231
ESS data, SYSPRINT sample report.....234
Frame-relay data, SYSPRINT sample report.....235
IBM 3710 cluster controller, SYSPRINT sample report.....236
NRF data, SYSPRINT sample report.....236
TIC data, SYSPRINT sample report.....237
VTAM buffer trace data (alternate), SYSPRINT sample report.....238
VTAM buffer trace confidential data, SYSPRINT sample report.....239
VTAM buffer, SYSPRINT sample report.....239
VTAM network full buffer trace data, SYSPRINT sample report.....241
X.25 data, SYSPRINT sample report.....242
VTAM internal trace report.....242
X.25 line trace report.....243

Appendix C. Accessibility.....245

Notices.....247
Terms and conditions for product documentation.....248
IBM Online Privacy Statement.....249
Policy for unsupported hardware.....249
Minimum supported hardware.....249
Policy for unsupported hardware.....250
Trademarks.....250

Bibliography.....251

Index.....255

Figures

1. Trace data to output report reference.... 4

2. Trace data type to control parameter reference.... 5

3. Relationship of the CSS line trace to NCP and to the 3746 Model 900 hardware....9

4. Relationship of the CSS adapter trace to NCP and to the 3746 Model 900 hardware....16

5. Sample ACF/TAP procedure....18

6. ACF/TAP method for numbering trace file input data....168

7. Communications line adapter PIU data sample report.... 174

8. CSS adapter with ECB flag, sample report.... 175

9. ESCON data, CSS adapter trace sample report....176

10. Frame-relay data, CSS adapter trace sample report.... 177

11. ISDN data, CSS adapter trace sample report....178

12. Token-ring data, CSS adapter trace sample report....179

13. CSS line trace sample report.... 181

14. Frame-relay logical line trace summary sample report....183

15. GPT index sample report.... 185

16. GPT summary sample report....187

17. ESS data, LAN line trace sample report.... 189

18. Frame-relay over token-ring data, LAN line trace sample report....190

19. NTRI logical data, LAN line trace sample report....190

20. NTRI physical and IP data, LAN line trace sample report.... 191

21. Token-ring with BNN HPR data, LAN line trace sample report....191

22. ESS line trace, line trace detail sample report....196

23. Frame-relay logical data, line trace detail sample report.... 197

24. Frame-relay physical data, line trace detail sample report....198

25. Frame-relay physical with BNN data, line trace detail sample report.... 198

26. Frame-relay physical with BNN HPR data, line trace detail sample report.... 199

27. Frame-relay over token-ring data, line trace detail sample report.... 200

28. IP data, line trace detail sample report....200

29. IP over frame-relay data, line trace detail sample report.... 201

30. NCP line trace data, line trace detail sample report 202

31. NTRI line trace data, line trace detail sample report.... 203

32. Token-ring with BNN HPR data, line trace sample report.... 203

33. X.25 data, line trace detail sample report....204

34. CSP data, line trace summary sample report.... 206

35. ESS line data, line trace summary sample report....206

36. Frame-relay physical data, line trace summary sample report....207

37. Frame-relay physical with BNN HPR data, line trace summary sample report.... 208

38. X.25 data, line trace summary sample report.... 208

39. LUNAME network address cross-reference sample report.... 210

40. VTAM full buffer trace data (LONGPIU=YES), network data traffic sample report.... 211

41. Network error report sample....212

42. Communications line adapter PIU data SNA detail sample report.... 215

43. Frame-relay data, SNA detail sample report.... 215

44. Frame-relay with BNN HPR data, SNA detail sample report....216

45. FMH5, SNA detail sample report....216

46. NTO data, SNA detail sample report.... 217

47. SDLC with BNN HPR data, SNA detail sample report.... 217

48. Token-ring with BNN HPR data, SNA detail sample report.... 218

49. VTAM buffer trace data (alternate), SNA detail sample report....219

50. VTAM full buffer trace data (LONGPIU=YES), SNA detail sample report....220

51. Frame-relay data, SNA summary sample report....227

52. Frame-relay with BNN HPR data, SNA summary sample report....227

53. NCP line trace data, SNA summary sample report....228

54. NTO data sample report....228

55. SDLC with BNN HPR data sample report....229

56. TG trace data, SNA summary sample report....229

57. Token-ring with BNN HPR data, SNA summary sample report....230

58. VTAM buffer data (alternate), SNA summary sample report....230

59. SUMMARY parameter illustration....232

60. ESS data, SYSPRINT sample report....234

61. Frame-relay data, SYSPRINT sample report....235

62. IBM 3710 cluster controller, SYSPRINT sample report....236

63. NRF data, SYSPRINT sample report....236

64. TIC data, SYSPRINT sample report....237

65. VTAM buffer trace data (alternate), SYSPRINT sample report....238

66. VTAM buffer trace confidential data, SYSPRINT sample report....239

67. VTAM buffer, SYSPRINT sample report....240

68. VTAM network full buffer trace data, SYSPRINT sample report....241

69. X.25 data, SYSPRINT sample report....242

70. VTAM internal trace sample report....243

71. X.25 line trace sample report....244

Tables

1. Trace type and trace data description..... 1

2. Byte trace limitations..... 8

3. Number of bytes recorded for each PIU..... 11

4. Number of bytes recorded by GPT for each resource..... 12

5. ACF/TAP Control parameter functions..... 30

6. Trace types and corresponding node names..... 46

7. Supported trace types and selected nodes..... 47

8. Methods of using the date and time parameters to select trace data..... 50

9. Methods of using the date and time parameters to select trace data without SDATE and EDATE..... 50

10. Methods of using the date and time parameters to select trace data without STIME and ETIME 51

11. Contents of the GTF header portion of GTF trace records..... 126

12. Contents of the DOS/VTAM trace block header..... 127

13. DSJ203I variables and meanings..... 128

14. DSJ204I variables and meanings..... 129

15. PIU trace entry message text meanings..... 130

16. GPT status byte meanings..... 130

17. DSJ207I message text variable field meaning..... 131

18. GTF record header variable fields text meaning..... 131

19. 3746 Model 950 trace header variable fields text meaning..... 132

20. 3746 Model 950 trace header variable fields text meaning..... 133

21. 3746 Model 950 trace header variable fields text meaning..... 133

22. 3746 Model 950 trace header variable fields text meaning..... 134

23. 3746 Model 950 trace header variable fields text meaning..... 134

24. Report description for CSS adapter trace reports....168

25. Report description legend for CSS line trace reports.... 179

26. Report description legend for frame-relay logical line trace summary reports....182

27. GPT index report 183

28. GPT summary report....185

29. LAN line trace report....187

30. Line trace detail report.... 192

31. Line trace summary report.... 204

32. LUNAME network address cross-reference report.... 209

33. Network data traffic report description....211

34. Network error report description.... 212

35. SNA detail report description.... 213

36. SNA summary report description....221

37. SUMMARY values and results....231

38. SYSPRINT report description.... 232

39. VTAM internal trace report description.... 242

40. X.25 line trace report description....243

About this document

Use the Advanced Communications Function/Trace Analysis Program (ACF/TAP) service aid to produce reports for analyzing the trace data information. The information in this document helps in gathering the trace data collected and stored in the host processor.

The information in this document supports both IPv6 and IPv4. Unless explicitly noted, information describes IPv4 networking protocol. IPv6 support is qualified within the text.

Who should read this document

This book is for programmers and program support personnel who are responsible for isolating, diagnosing, and debugging the network control program (NCP) and z/OS Communications Server.

How this document is organized

This document contains the following topics:

- Chapter 1, “ACF/TAP and trace data,” on page 1 gives a brief overview of ACF/TAP and the trace data it supports and processes.
- Chapter 2, “Gathering host-collected trace data,” on page 7 describes how to obtain the trace data to diagnose network problems.
- Chapter 3, “Starting and running ACF/TAP,” on page 17 describes the commands and procedures to start and run ACF/TAP.
- Chapter 4, “ACF/TAP parameters,” on page 21 describes the ACF/TAP output report and control parameters.
- Appendix A, “Messages,” on page 57 contains ACF/TAP messages.
- Appendix B, “ACF/TAP sample reports,” on page 167 provides a quick reference for the ACF/TAP report samples.
- Appendix C, “Accessibility,” on page 245 describes accessibility features to help users with physical disabilities.
- “Notices” on page 247 contains notices and trademarks that are used in this information.
- “Bibliography” on page 251 contains descriptions of the information in the z/OS Communications Server library.

How to use this document

For information about other types of traces and service aids, see z/OS Communications Server: SNA Diagnosis Vol 1, Techniques and Procedures and z/OS Communications Server: SNA Diagnosis Vol 2, FFST Dumps and the VIT. For additional help, contact the IBM® Support Center.

The following terms are used in this book:

Port and Channel with LPDA
In discussions concerning link problem determination aid (LPDA) for multiport and data multiplex mode (DMPX) modems, the terms port and channel are synonymous. Although port is the more commonly used term, channel might be used in sections describing LPDA.

IBM Special Products or User-Written Code
This phrase refers to IBM special products such as Network Terminal Option (NTO), Network Routing Facility (NRF), X.25 NCP Packet Switching Interface (NPSI), or user-written code.

IBM 3745 Communication Controller Model Numbers
The term IBM 3745 Communication Controller refers to all IBM 3745 models. When particular models are discussed, the appropriate model numbers are specified. Model numbers include, the following:

© Copyright IBM Corp. 2000, 2025

- IBM 3745-130
- 3745-150
- 3745-160
- 3745-170
- 3745-17A
- 3745-210
- 3745-21A
- 3745-310
- 3745-31A
- 3745-410
- 3745-41A
- 3745-610
- 3745-61A.

CSS, 37CS, and 3746 Model 900
The terms connectivity subsystem (CSS) and 37CS refer to the 3746 Model 900 connectivity subsystem. This is an expansion frame that extends the connectivity and enhances the performance of the IBM 3745 Communication Controller.

Token Ring
NCP can connect to an IBM Token-Ring Network using the NCP/Token-Ring interconnection (NTRI) or the 3746 Model 900 connectivity subsystem attachment. This document uses the term token ring to refer to either type of connection.

Frame Relay
To support frame-relay networks, NCP can use a transmission subsystem (TSS) or high performance transmission subsystem (HPTSS) adapter on the 3745, or NCP can use a communication line processor (CLP) adapter on the 3746 Model 900 connectivity subsystem. Unless otherwise stated, this document uses the term frame relay to refer to a 3745 or a 3746 Model 900.

Integrated Services Digital Network (ISDN)
Integrated services digital network (ISDN) is a digital end-to-end telecommunication network that supports multiple services including, but not limited to, voice and data. ISDNs are used in public and private network architectures. Starting with NCP V7R5, the 3746 Model 900 connectivity subsystem (CSS) supports an interface into existing ISDN environments for SNA sessions routed through the CSS.

How to provide feedback to IBM

We welcome any feedback that you have, including comments on the clarity, accuracy, or completeness of the information. See, How to send feedback to IBM for additional information.

Conventions and terminology that are used in this information

Commands in this information that can be used in both TSO and z/OS UNIX environments use the following conventions:

- When describing how to use the command in a TSO environment, the command is presented in uppercase (for example, NETSTAT).
- When describing how to use the command in a z/OS UNIX environment, the command is presented in bold lowercase (for example, **netstat**).
- When referring to the command in a general way in text, the command is presented with an initial capital letter (for example, Netstat).

All the exit routines described in this information are *installation-wide exit routines*. The installation-wide exit routines also called installation-wide exits, exit routines, and exits throughout this information.

The TPF logon manager, although included with VTAM®, is an application program; therefore, the logon manager is documented separately from VTAM.

Samples used in this information might not be updated for each release. Evaluate a sample carefully before applying it to your system.

z/OS no longer supports mounting HFS data sets (The POSIX style file system). Instead, a z/OS File System (zFS) can be implemented. The term hierarchical file system, abbreviated as HFS, is defined as a data structure that has a hierarchical nature with directories and files. References to hierarchical file systems or HFS might still be in use in z/OS Communications Server publications.

Network Express and Open Systems Adapter-Express (OSA-Express) terminology:

- The Network Express feature is introduced with the IBM z17 processor family. The Network Express feature is the next generation of Open Systems Adapter (OSA) technology. The term OSA (Open Systems Adapter) is carried forward with Network Express. The IBM z17 processor supports both the Network Express and the OSA-Express7S features. In this information, when a general reference is made to OSA that applies to all these features, then the term *OSA* is used, and the acronym will appear in italics. This formatting style and guideline for usage for the term OSA is used throughout this document. When a distinction is necessary, then the specific feature name is used such as the Network Express feature
- The Network Express feature is defined as channel (CHPID) type OSH (Open System Adapter for Hybrid networks) that might operate in either 10 GbE or 25 GbE link speed. When this term is used in this information, the processing being described applies to either link speed. If processing is applicable to only one link speed, the full terminology, for instance, IBM 25 GbE Network Express will be used.
- Network Express is defined with new system architecture called Enhanced Queued Direct I/O (EQDIO). In this information there are many references to QDIO or OSA/QDIO. When the reference applies to both QDIO and EQDIO the reference just indicates OSA. When the reference is specific to the QDIO or EQDIO architecture, then the specific architecture is referenced, for example, OSA/QDIO or OSA/EQDIO. Some OSA references also use or include the channel type for OSA such as OSD (QDIO). When the reference applies to both features, then the term OSA is used. When a distinction is necessary then the specific channel or architecture type is used, OSD/QDIO or OSH/EQDIO.

Shared Memory Communications over Remote Direct Memory Access (SMC-R) terminology

- *RoCE* , which is a generic term representing IBM® 10 GbE RoCE Express, IBM 10 GbE RoCE Express2, IBM 25 GbE RoCE Express2, IBM 10 GbE RoCE Express3, IBM 25 GbE RoCE Express3, IBM 10 GbE Network Express and IBM 25 GbE Network Express feature capabilities. When this term is used in this information, the processing being described applies to all of these features. If processing is applicable to only one feature, the full terminology, for instance, Network Express will be used.
- RoCE Express2, which is a generic term representing an IBM RoCE Express2 feature that might operate in either 10 GbE or 25 GbE link speed. When this term is used in this information, the processing being described applies to either link speed. If processing applies to only one link speed, the full terminology, for instance, IBM 25 GbE RoCE Express2 will be used.
- RoCE Express3, which is a generic term representing an IBM RoCE Express3 feature that might operate in either 10 GbE or 25 GbE link speed. When this term is used in this information, the processing being described applies to either link speed. If processing applies to only one link speed, the full terminology, for instance, IBM 25 GbE RoCE Express3 will be used.
- Network Express, which is a generic term representing an Network Express feature that might operate in either 10 GbE or 25 GbE link speed. When this term is used in this information, the processing being described applies to either link speed. If processing is applicable to only one link speed, the full terminology, for instance, IBM 25 GbE Network Express will be used. When configured with a CHPID type of NETH, the Network Express feature may operate as an RDMA network interface card.
- RDMA network interface card (RNIC), which is used to refer to the IBM 10 GbE RoCE Express, IBM 10 GbE RoCE Express2, IBM 25 GbE RoCE Express2, IBM 10 GbE RoCE Express3, or IBM 25 GbE RoCE Express3, IBM 10 GbE Network Express or IBM 25 GbE Network Express feature.
- Shared RoCE environment, which means that the *ROCE* feature can be used concurrently, or shared, by multiple operating system instances. The feature is considered to operate in a shared RoCE environment even if you use it with a single operating system instance.

Clarification of notes

Information traditionally qualified as Notes is further qualified as follows:

Attention
Indicate the possibility of damage

Guideline
Customary way to perform a procedure

Note
Supplemental detail

Rule
Something you must do; limitations on your actions

Restriction
Indicates certain conditions are not supported; limitations on a product or facility

Requirement
Dependencies, prerequisites

Result
Indicates the outcome

Tip
Offers shortcuts or alternative ways of performing an action; a hint

How to read a syntax diagram

This section describes how to read the syntax diagrams used in this book.

- Read the diagrams from left-to-right, top-to-bottom, following the main path line. Each diagram begins on the left with double arrowheads (►►) and ends on the right with two arrowheads facing each other (►◄).

```
►►─┤ Syntax Diagram ├─►◄
```

- If a diagram is longer than one line, the first line ends with a single arrowhead (►) and the second line begins with a single arrowhead.

```
►►─┤ First Line ├── OPERAND1 ── OPERAND2 ── OPERAND3 ── OPERAND4 ── OPERAND5 ──►

   ►──┤ Second Line ├─►◄
```

- Required operands and values appear on the main path line.

```
►►─ REQUIRED_OPERAND ─►◄
```

  You must code required operands and values.

  If there is more than one mutually exclusive required operand or value to choose from, they are stacked vertically in alphanumeric order.

```
►►─┬─ REQUIRED_OPERAND_OR_VALUE_1 ─┬─►◄
   └─ REQUIRED_OPERAND_OR_VALUE_2 ─┘
```

- Optional operands and values appear below the main path line.

```
►►──────────────────────────►◄
   └─ OPERAND ─┘
```

  You can choose not to code optional operands and values.

  If there is more than one mutually exclusive optional operand or value to choose from, they are stacked vertically in alphanumeric order below the main path line.

```
►►──┬──────────────────────────────┬──►◄
   │  OPERAND_OR_VALUE_1          │
   └  OPERAND_OR_VALUE_2          ┘
```

- An arrow returning to the left above an operand or value on the main path line means that the operand or value can be repeated. The comma means that each operand or value must be separated from the next by a comma.

```
          ,◄
          │
►►──────REPEATABLE_OPERAND──────►◄
```

- An arrow returning to the left above a group of operands or values means more than one can be selected, or a single one can be repeated.

```
►►──┬──────────────────────────────────────────────┬──►◄
   │          ,◄                                   │
   │          │                                    │
   │──────REPEATABLE_OPERAND_OR_VALUE_1────────────│
   └──────REPEATABLE_OPERAND_OR_VALUE_2────────────┘
```

- A word in all uppercase is an operand or value you must spell exactly as shown. In this example, you must code ***OPERAND***.

  Note: VTAM and IP commands are not case sensitive. You can code them in uppercase or lowercase. If the operand is shown in both uppercase and lowercase, the uppercase portion is the abbreviation (for example, OPERand).

  ```
  ►►─ OPERAND ─►◄
  ```

  If an operand or value can be abbreviated, the abbreviation is described in the text associated with the syntax diagram.
- If a diagram shows a character that is not alphanumeric (such as parentheses, periods, commas, and equal signs), you must code the character as part of the syntax. In this example, you must code ***OPERAND=(001,0.001)***.

  ```
  ►►─ OPERAND ──═──(──001──,──0.001──)─►◄
  ```

- If a diagram shows a blank space, you must code the blank space as part of the syntax. In this example, you must code ***OPERAND=(001 FIXED)***.

  ```
  ►►─ OPERAND ──═──(──001──   ──FIXED──)─►◄
  ```

- Default operands and values appear above the main path line. VTAM uses the default if you omit the operand entirely.

  ```
  ►►──┬─────DEFAULT─────┬──►◄
     │                  │
     └─────OPERAND──────┘
  ```

- A word in all lowercase italics is a *variable*. Where you see a variable in the syntax, you must replace it with one of its allowable names or values, as defined in the text.

  ```
  ►►─ variable ─►◄
  ```

- References to syntax notes appear as numbers enclosed in parentheses above the line. Do not code the parentheses or the number.

  ```
  ►►─ OPERAND ──1─►◄
  ```

  Notes:

[1] An example of a syntax note.

- Some diagrams contain *syntax fragments*, which serve to break up diagrams that are too long, too complex, or too repetitious. Syntax fragment names are in mixed case and are shown in the diagram and in the heading of the fragment. The fragment is placed below the main diagram.

```
►►─┤ Reference to Syntax Fragment ├─►◄
```

Syntax Fragment

```
►►─ 1ST_OPERAND ──,── 2ND_OPERAND ──,── 3RD_OPERAND ─►◄
```

Prerequisite and related information

z/OS Communications Server function is described in the z/OS Communications Server library. Descriptions of those documents are listed in "Bibliography" on page 251, in the back of this document.

Required information

Before using this product, you should be familiar with TCP/IP, VTAM, MVS, and UNIX System Services.

Softcopy information

Softcopy publications are available in the following collection.

Titles	Description
IBM Z Redbooks	The IBM Z® subject areas range from e-business application development and enablement to hardware, networking, Linux®, solutions, security, parallel sysplex, and many others. For more information about the Redbooks® publications, see http://www.redbooks.ibm.com/ and http://www.ibm.com/systems/z/os/zos/zfavorites/.

Other documents

This information explains how z/OS references information in other documents.

When possible, this information uses cross-document links that go directly to the topic in reference using shortened versions of the document title. For complete titles and order numbers of the documents for all products that are part of z/OS, see z/OS Information Roadmap (SA23-2299). The Roadmap describes what level of documents are supplied with each release of z/OS Communications Server, and also describes each z/OS publication.

To find the complete z/OS library, visit the z/OS library in IBM Documentation (https://www.ibm.com/docs/en/zos).

Relevant RFCs are listed in an appendix of the IP documents. Architectural specifications for the SNA protocol are listed in an appendix of the SNA documents.

The following table lists documents that might be helpful to readers.

Title	Number
DNS and BIND, Fifth Edition, O'Reilly Media, 2006	ISBN 13: 978-0596100575
Routing in the Internet, Second Edition, Christian Huitema (Prentice Hall 1999)	ISBN 13: 978-0130226471
sendmail, Fourth Edition, Bryan Costales, Claus Assmann, George Jansen, and Gregory Shapiro, O'Reilly Media, 2007	ISBN 13: 978-0596510299
SNA Formats	GA27-3136

Title	Number
TCP/IP Illustrated, Volume 1: The Protocols, W. Richard Stevens, Addison-Wesley Professional, 1994	ISBN 13: 978-0201633467
TCP/IP Illustrated, Volume 2: The Implementation, Gary R. Wright and W. Richard Stevens, Addison-Wesley Professional, 1995	ISBN 13: 978-0201633542
TCP/IP Illustrated, Volume 3: TCP for Transactions, HTTP, NNTP, and the UNIX Domain Protocols, W. Richard Stevens, Addison-Wesley Professional, 1996	ISBN 13: 978-0201634952
TCP/IP Tutorial and Technical Overview	GG24-3376
Understanding LDAP	SG24-4986
z/OS Cryptographic Services System SSL Programming	*SC14-7495*
z/OS IBM Tivoli Directory Server Administration and Use for z/OS	*SC23-6788*
z/OS JES2 Initialization and Tuning Guide	*SA32-0991*
z/OS Problem Management	*SC23-6844*
z/OS MVS Diagnosis: Reference	*GA32-0904*
z/OS MVS Diagnosis: Tools and Service Aids	*GA32-0905*
z/OS MVS Using the Subsystem Interface	*SA38-0679*
z/OS Program Directory	*GI11-9848*
z/OS UNIX System Services Command Reference	*SA23-2280*
z/OS UNIX System Services Planning	*GA32-0884*
z/OS UNIX System Services Programming: Assembler Callable Services Reference	*SA23-2281*
z/OS UNIX System Services User's Guide	*SA23-2279*
z/OS C/C++ Runtime Library Reference	*SC14-7314*
OSA-Express Customer's Guide and Reference	*SA22-7935*

Redbooks publications

The following Redbooks publications might help you as you implement z/OS Communications Server.

Title	Number
IBM z/OS Communications Server TCP/IP Implementation, Volume 1: Base Functions, Connectivity, and Routing	SG24-8096
IBM z/OS Communications Server TCP/IP Implementation, Volume 2: Standard Applications	SG24-8097
IBM z/OS Communications Server TCP/IP Implementation, Volume 3: High Availability, Scalability, and Performance	SG24-8098
IBM z/OS Communications Server TCP/IP Implementation, Volume 4: Security and Policy-Based Networking	SG24-8099
IBM Communication Controller Migration Guide	SG24-6298
IP Network Design Guide	SG24-2580
Managing OS/390 TCP/IP with SNMP	SG24-5866

Title	Number
Migrating Subarea Networks to an IP Infrastructure Using Enterprise Extender	SG24-5957
SecureWay Communications Server for OS/390 V2R8 TCP/IP: Guide to Enhancements	SG24-5631
SNA and TCP/IP Integration	SG24-5291
TCP/IP in a Sysplex	SG24-5235
TCP/IP Tutorial and Technical Overview	GG24-3376
Threadsafe Considerations for CICS	SG24-6351

Where to find related information on the Internet

z/OS

This site provides information about z/OS Communications Server release availability, migration information, downloads, and links to information about z/OS technology

http://www.ibm.com/systems/z/os/zos/

z/OS Internet Library

Use this site to view and download z/OS Communications Server documentation

http://www.ibm.com/systems/z/os/zos/library/bkserv/

z/OS Communications Server product

The page contains z/OS Communications Server product introduction

https://www.ibm.com/products/zos-communications-server

IBM Communications Server product support

Use this site to submit and track problems and search the z/OS Communications Server knowledge base for Technotes, FAQs, white papers, and other z/OS Communications Server information

https://www.ibm.com/mysupport

IBM Communications Server performance information

This site contains links to the most recent Communications Server performance reports

http://www.ibm.com/support/docview.wss?uid=swg27005524

IBM Systems Center publications

Use this site to view and order Redbooks publications, Redpapers, and Technotes

http://www.redbooks.ibm.com/

z/OS Support Community

Search the z/OS Support Community Library for Techdocs (including Flashes, presentations, Technotes, FAQs, white papers, Customer Support Plans, and Skills Transfer information)

z/OS Support Community

Tivoli® NetView for z/OS

Use this site to view and download product documentation about Tivoli NetView for z/OS

http://www.ibm.com/support/knowledgecenter/SSZJDU/welcome

RFCs

Search for and view Request for Comments documents in this section of the Internet Engineering Task Force website, with links to the RFC repository and the IETF Working Groups web page

http://www.ietf.org/rfc.html

Internet drafts

View Internet-Drafts, which are working documents of the Internet Engineering Task Force (IETF) and other groups, in this section of the Internet Engineering Task Force website

http://www.ietf.org/ID.html

Information about web addresses can also be found in information APAR II11334.

Note: Any pointers in this publication to websites are provided for convenience only and do not serve as an endorsement of these websites.

DNS websites

For more information about DNS, see the following USENET news groups and mailing addresses:

USENET news groups
comp.protocols.dns.bind

BIND mailing lists
https://lists.isc.org/mailman/listinfo

BIND Users

- Subscribe by sending mail to bind-users-request@isc.org.
- Submit questions or answers to this forum by sending mail to bind-users@isc.org.

BIND 9 Users (This list might not be maintained indefinitely.)

- Subscribe by sending mail to bind9-users-request@isc.org.
- Submit questions or answers to this forum by sending mail to bind9-users@isc.org.

The z/OS Basic Skills Information Center

The z/OS Basic Skills Information Center is a web-based information resource intended to help users learn the basic concepts of z/OS, the operating system that runs most of the IBM mainframe computers in use today. The Information Center is designed to introduce a new generation of Information Technology professionals to basic concepts and help them prepare for a career as a z/OS professional, such as a z/OS systems programmer.

Specifically, the z/OS Basic Skills Information Center is intended to achieve the following objectives:

- Provide basic education and information about z/OS without charge
- Shorten the time it takes for people to become productive on the mainframe
- Make it easier for new people to learn z/OS

To access the z/OS Basic Skills Information Center, open your web browser to the following website, which is available to all users (no login required): https://www.ibm.com/support/knowledgecenter/zosbasics/com.ibm.zos.zbasics/homepage.html?cp=zosbasics

Summary of changes

This document contains terminology, maintenance, and editorial changes, including changes to improve consistency and retrievability. Technical changes or additions to the text and illustrations for the current edition are indicated by a vertical line to the left of the change.

Summary of changes for z/OS 3.2

The following content is new, changed, or no longer included in z/OS 3.2.

New

The following content is new.

September 2025 release

- None.

Changed

The following content is changed.

September 2025 release

- None.

Deleted

The following content is deleted.

September 2025 release

- None.

Changes made in z/OS Communications Server 3.1

This information contains no technical change for this release.

© Copyright IBM Corp. 2000, 2025

Chapter 1. ACF/TAP and trace data

Advanced Communication Function/Trace Analysis Program (ACF/TAP) is a service aid that functions as an application program. ACF/TAP operates independently of the VTAM access methods, but ACF/TAP cannot process a trace file when the access method is using the file.

The following types of trace data are produced by the VTAM and NCP trace facilities that ACF/TAP analyzes and formats into output reports:

- Buffer
- GPT data
- Line
- Network controller
- SIT (Scanner Interface Trace)
- TG (NCP Transmission Group Trace)
- VTAM Internal Traces (VIT)

ACF/TAP also highlights unusual conditions in the trace data information that might indicate possible error situations.

Trace facilities

ACF/TAP uses trace data files as input. Therefore, it is necessary to create the trace data input files before running ACF/TAP.

Tip: Because a trace is only a representation of an event, the trace data might not completely describe the event as it occurred.

For the generalized trace facility (GTF) for MVS, before using a VTAM buffer contents trace, I/O trace, NCP line trace, or transmission group trace with VTAM, you must start GTF at the host operator's console. The data collected by GTF is analyzed by ACF/TAP only if VTAM is the access method. For more information about GTF, see z/OS MVS Diagnosis: Tools and Service Aids.

Trace data processed by ACF/TAP

Table 1 on page 1 lists the various trace types and the data that can be created using the trace facilities described in “Trace facilities” on page 1.

After the trace data has been created, the applicable output reports can be produced. For information about output report parameters and the output report contents, see “Output report parameters” on page 21.

Table 1. Trace type and trace data description

Trace type	Trace data description
BUFFER	VTAM buffer trace records the contents of message buffers when data is sent by an application and when data is received from the network.
CSP	NCP line trace records the activity on a designated line attached to the communications controller.
CSS adapter	Gathers information from the 3746 Model 900 hardware.
CSS line	Records the data exchanged between NCP and the 3746 Model 900.
ENET	Ethernet subsystem line and scanner traces record information flowing between NCP and the Ethernet subsystem adapter on a designated line.

© Copyright IBM Corp. 2000, 2025

Table 1. Trace type and trace data description (continued)	
Trace type	**Trace data description**
FRLY	Frame-relay line and scanner traces record the data flow on a designated frame-relay line.
GPT	NCP generalized PIU trace records the flow of PIUs exchanged between the NCP and its attached resources.
NETCTLR	Control unit trace for IBM 3710 Network Controller traces SDLC, BSC, and S/S data link control frames sent or received by the controller.
NRF	Network Routing Facility records information about PIUs flowing in and out of NRF and the processing taking place on those PIUs.
NTO	Network Terminal Option FID0 maps the PIUs that flow between NTO and the NCP BSC/SS processor component on behalf of a specific NTO line.
NTO INT	Network Terminal Option internal trace records the processing of all control points as PIUs enter and leave NTO.
NTRI	NCP Token-Ring interconnection records the data flow on a designated line in the token ring. Input/output halfword (IOH) trace records that are dedicated to a particular token-ring interface coupler (TIC) and the token-ring multiplexer that controls the TIC.
SIT	Scanner interface trace records the operating parameters of the line whenever the IBM 3720, 3725 or 3745 sends or receives data. Records outbound data after NCP processes it and inbound data before it is passed to NCP.
TG	NCP transmission group PIU trace records the activity on all lines contained in a transmission group as if it were a single line.
TIC	Token-ring interface coupler internal trace gathers information about the internal processes of the TIC and reports it to the host.
VIT	VTAM internal trace shows the sequence of internal events such as scheduling of processes, storage management and the flow of internal PIUs between VTAM components.
X.25	NCP Packet Switching Interface (NPSI) traces (NPSI V2 and later) assist with NPSI/NCP communications problem determination specifies the physical circuit trace allows you to record the activity of a specific physical circuit that works with a communications scanner processor.
XI	X.25 SNA Interconnection trace records the activity on a physical circuit working with a communications scanner processor.

Traces not processed by ACF/TAP

The following trace data cannot be processed by ACF/TAP:

- NCP channel adapter traces
- User buffer traces
- VTAM storage management service traces

How ACF/TAP supports GPT data

ACF/TAP supports NCP GPT data with the IXPRT, INPUT, and INDEX parameters. You can use all three parameters to selectively print the PIUs for single or multiple sessions or conversations.

Session and conversation index (IXPRT)

Use the IXPRT parameter to create and print the session and conversation index from the GTF-collected data. Enter YES on the IXPRT parameter to allow ACF/TAP to read the trace data set and create a data set consisting of the new status records for dummy BINDs and the function management header 5 (FMH5) PIUs. The maximum record length of the data set is 254 bytes.

The records in the new data set are sorted and printed to produce a report listing the dummy BIND session start information (FQPCID and address pair) followed by the FMH5s that flowed on this session (where the FMH5s represent conversation initiations between transaction programs). FMH5s and dummy BINDs can be correlated by their OAF/DAF pair. The ACF/TAP record number is associated with the FMH5 entries for later use in selecting conversations to be printed. The entire FMH5 is displayed in hexadecimal, format and selected fields are parsed and displayed. These fields include transaction program name, fully qualified logical unit name, and conversation correlation (if present).

Session and conversion report

After you have examined the index and decided which conversations to view, use IXPRT=NO or INPUT=GPT (or ALL) for a single conversation or use the INDEX parameter for multiple conversations. The INDEX parameter specifies multiple pairs of addresses, each with the starting record number.

ACF/TAP searches for the specified record, and from that point forward, prints each PIU whose OAF/DAF pair corresponds to the specified address pair. GPT traces the PIUs coming and going from a specified resource, so each of the specified addresses in the pair can be either OAF or DAF. This search continues until one of the following is found:

- Another FMH5 for the address pair (starting another conversation)
- A BIND for the address pair (the original session has ended, and a new one is being initiated)
- A new status record for the dummy BIND (the original session has ended, and a new one has started)

Both the BIND and the status record for the dummy BIND are checked for the following states:

- NCP is in an abnormal condition (slowdown, blocked virtual route) and is not tracing
- GPT is activated for a resource higher in the hierarchy for this logical unit, and the dummy BINDs are no longer being created (dummy BIND is lost and the BIND is captured)

ACF/TAP restrictions when using GPT data

The ACF/TAP session index entry is created only for LU-LU sessions and the full FMH5 PIU (up to 254 bytes) is captured only when GPT has been activated for a specific logical unit. This means that when GPT is activated for a specific physical unit or link hierarchy, the PIUs flowing to and from all of the logical units subordinate to that physical unit or link are still captured and appear in the trace. However, only 40 bytes of the FMH5 are traced and the dummy BINDs that NCP creates to denote the start of a session (and that ACF/TAP uses to create the session index) are not created for any of the sessions in which the subordinate logical units are engaged. The underlying assumption for this restriction is that this index is useful only in finding problems at the logical unit level.

Two consecutive runs of ACF/TAP are required to selectively print PIUs from the ACF/TAP index. For the second run of ACF/TAP, except for the specification of the elements to be selected, no parameter changes are needed. The first run creates the index and the second run prints the selected PIUs.

There is no entry in the ACF/TAP index for LU-LU sessions that were not successfully initiated because NCP rejected the BIND, or the SLU rejected the BIND. The BIND and -RSP(BIND) or UNBIND are captured and appear in the trace in either case, but there is no corresponding index item for entry into the file.

Trace data references and output reports

This topic contains a cross-reference of trace data to ACF/TAP output reports and a cross-reference of trace data to ACF/TAP control parameters.

Figure 1 on page 4 shows the different types of trace data and the output report (or reports) to which the data can be formatted.

For a description of the trace data types, see "Trace data processed by ACF/TAP" on page 1. For information about the output reports and parameters see "Output report parameters" on page 21. For a list of sample reports see Appendix B, "ACF/TAP sample reports," on page 167. Although the format is different for each type of report, each report type has a standard format, regardless of the trace data displayed. Therefore, only a limited number of samples are provided for each particular report type.

		Trace Data Type																			
		INPUT=ALL																			
								INPUT=LINE													
Report Names and Parameters		ANYNET SNA/IP	BUFFER	GPT	NETCTLR	RNIO	SCAN	VIT	CSS ADAPTER	CSS LINE	CSP	ENET	FRLY	NRF	NTO	NTO INT	NTRI	SIT	TG	TIC	X25
Summary : SYSPRINT/SYSLST		X	X	X	X	X	X	X	X	X	X	X	X	X	X	X	X	X	X	X	X
CSS Adapter Trace:	CAPRT								X												
CSS Line Trace:	CSPRT									X											
GPT Index:	IXPRT			X																	
GPT Summary:	GSPRT			X																	
LAN Line Trace:	NTPRT											X					X				
Line Trace Detail:	LDPRT										X	X	X				X	X			X
Line Trace Summary:	LSPRT										X	X	3					2			X
LUNAME - Ntwk Addr:	LUPRT		X								X								X		
Network Data Traffic:	DTPRT	X	X	X		X			X	X	X		X		X		X		X		
Network Error Analysis:	NEPRT		X	X		X			X	X	X	X	X		X		X		X		X
SNA Detail:	SDPRT	X	X	X		X			X	X	X		1		X		X		X		
SNA Summary:	SSPRT	X	X	X		X			X	X	X		1		X		X		X		
VTAM Internal Trace:	VTPRT							X													
X.25 Line Trace:	NPPRT								X												X
FR Logical Line Trace Summary:	FRPRT												3								

Figure 1. Trace data to output report reference

Notes:

1. For NCP V6R2 and later, data generated by frame-relay switching equipment (FRSE) functions does not appear on this report.
2. This trace data does not appear on this report when correlated duplex data is present.
3. Line trace summary data can be found for FR physical line trace on LSPRT and for FR logical line trace on FRPRT.

NCP-collected line trace data on duplex lines

For NCP-collected line trace data on duplex lines other than CSS lines, NCP stores the information in separate buffers. One is for transmit and one is for receive. The buffer that fills first is transmitted to the host, so ACF/TAP sees the trace data in blocks and out of order. To sort the trace data and put it in sequential order, run the line trace summary report. You can then cross-reference the trace entries to one of the following four reports to collect information about the detail:

- X.25 line trace
- Line trace detail
- SNA summary
- SNA detail

In the line trace summary report, use the element number to cross-reference trace data to the X.25 line trace and line trace detail reports. To cross-reference trace data to the SNA summary and SNA detail reports, use the message number in the line trace summary report.

Trace data and control parameters

The following matrix Figure 2 on page 5 shows the trace data types and the control parameters that can be used in formatting the trace information. For a description of the trace data types, see “Trace data processed by ACF/TAP” on page 1. For control parameter information, see “ACF/TAP control parameters” on page 30.

	Trace Data Type																			
	INPUT=ALL							INPUT=LINE												
Control Parameters	ANYNET SNA/IP	BUFFER	GPT	NETCTLR	RNIO	SCAN	VIT	CSS ADAPTER	CSS LINE	CSP	ENET	FRLY	NRF	NTO	NTO INT	NTRI	SIT	TG	TIC	X25
3746 M900 Specific								X	X											
CHARCODE	X	X	X	X	X	X	X	X	X	X	X	X	X	X	X	X	X	X	X	X
CSATYPE								X												
DLCI												X								
INDEX			X																	
LCN																				X
LLN											X					X				
LOGADDR									X											
NCPNAME			X																	
NODE		X		X	X			X	X	X	X	X	X	X	X	X	X	X		X
BFFRNODE		X																		
CTLRNODE				X																
GPTNODE			X																	
LINENODE								X	X	X	X	X	X	X	X	X	X	X	X	X
RNIONODE					X															
RRSUP										X		X								X
SDATE/EDATE	X	X	X	X	X	X	X	X	X	X	X	X	X	X	X	X	X	X	X	X
START/END		X			X	X														
STIME/ETIME	X	X	X	X	X	X	X	X	X	X	X	X	X	X	X	X	X	X	X	X
TOSUP												X								
VIEW	X	X	X	X	X	X	X	X	X	X	X	X	X	X	X	X	X	X	X	X
VIT: VITTYPE							X													
VITSTR							X													
VNAME							X													

Figure 2. Trace data type to control parameter reference

Gathering trace data information

When working with the IBM Support Center on a problem, ACF/TAP output reports may be required to assist in the diagnosis. Therefore, before contacting the Support Center, obtain the applicable trace data output reports as shown in “Trace data processed by ACF/TAP” on page 1. If other reports are needed, an IBM representative should advise you as to which ones to create. For more information about sample reports, see Appendix B, “ACF/TAP sample reports,” on page 167.

Also, a SYSPRINT report should be printed (use SUMMARY=YES parameter) for each trace data set you need.

If you do not want to print the entire trace data file, selection parameters can be entered to create reports showing specific information. See “ACF/TAP control parameters” on page 30 for a description of the parameters.

Chapter 2. Gathering host-collected trace data

You can use many service and documentation aids to diagnose suspected network errors. These aids help you examine the data flow through your network, which allows you to isolate and identify the source of network problems. If you determine that a problem has occurred, you can use these aids to gather information to help the IBM Support Center representatives assist you in resolving the problem.

The following traces collect and store data in the host processor:

- Network control program (NCP) line trace, NCP/Token-Ring interconnection (NTRI) line trace, NTRI input/output (IOH) trace, and CSS (connectivity subsystem) line trace
- NCP transmission group trace
- NCP generalized path information unit (PIU) trace (GPT)
- VTAM buffer contents trace
- Scanner interface trace (SIT), Token-ring interface coupler (TIC) trace, and connectivity subsystem (CSS) adapter trace

The access method and NCP share the function for these traces. The access method controls starting and stopping the traces, and NCP gathers the information in the trace records.

The advanced communications function/trace analysis program (ACF/TAP) processes trace data to produce output reports. For more information about ACF/TAP, see Chapter 1, “ACF/TAP and trace data,” on page 1. If you do not want to process traces using ACF/TAP, see z/OS Communications Server: SNA Operation.

NCP line traces

An NCP line trace, CSS line trace, or NTRI line trace records activity on a designated line attached to the communication controller. If you run a line trace on an inactive line attached to the communication controller, the line trace does not collect any data.

The NCP line trace information in this topic is NCP version and release sensitive.

NCP V5R3 and later

NCP has a transmit and receive correlator in the status entries of the line trace data to show the order in which the *transmits* and *receives* occurred. ACF/TAP sorts the trace records by the correlator and formats them on the line trace summary report in the order of occurrence. NCP does not unblock blocked PIUs in the line trace data.

NCP V6R1 and later

You can use the NCP line trace to trace the interface between NCP and an Ethernet-type subsystem (ESS) adapter or to trace frame-relay lines on a TSS or high-performance transmission subsystem (HPTSS) adapter.

The amount of data to be traced for frame-relay lines on HPTSS adapters is limited to a maximum of 58 bytes (before V7R5).

Except for CSS lines, NCP collects all duplex trace data in two different chains of buffers before sending the trace data to the host. One chain contains a trace of activity over the transmit leg of duplex lines; the other chain traces the activity on the receive leg. When the host receives a record trace data (RECTRD) request/response unit (RU), the data is either all from a transmit leg or all from a receive leg.

Restriction: Only one NTRI line trace (physical or logical) can be active at a time.

NCP V6R2 and later

Use the CSS line trace to trace the interface between NCP and resources attached to the 3746 Model 900.

© Copyright IBM Corp. 2000, 2025

NCP does not support the NCP line trace for communication lines driven by user-written line control code, unless the user's adapter control blocks (UACBs) are compatible with the NCP's adapter control blocks (ACB). The request to start or stop the line trace is passed to the user-written I/O code. At that point, the user-written code must support the trace. NCP handles line trace requests for user-written line control if it is compatible and if you code COMPACB=YES on the GROUP definition statement. For more information about the UACB, see the *NCP and SSP Customization Guide*, LY43-0031 and *NCP and SSP Customization Reference*, LY43-0032.

For the NCP line trace, HPTSS, Ethernet-type LAN, and CSS lines are to be considered high-speed lines.

NCP V6R3 and later

Synchronous data link control (SDLC) lines attached to the 3746 Model 900 with SPEED=1000000 or greater on the LINE definition statement are also considered as high speed.

Restrictions: (before V7R5)

- Only one high speed line can be traced at one time.
- The amount of data to be traced for high speed SDLC lines is limited to a maximum of 40 bytes.

NCP V7R5 and later

When you start a line trace you have the option to specify the number of bytes of data to trace. Starting with V7R5, the number of bytes of data that NCP can trace has been expanded. Table 2 on page 8 lists the maximum number of bytes that NCP traces for a specific line type.

Starting with V7R5, you can activate more than one line trace even when a line trace is active for a high-speed line. The number of line traces that can be active at one time is limited by the LTRACE keyword on the BUILD statement, which has a maximum value of eight. For restrictions on NTRI line traces, see “NTRI line trace and NTRI IOH trace” on page 9.

NCP V7R7 and later

You can activate a line trace for frame-relay logical lines on a transmission subsystem (TSS) or HPTSS adapter. Table 2 on page 8 shows byte trace limitation values.

Table 2. Byte trace limitations

Line type	Maximum number of bytes
NTRI physical	200
NTRI logical	Unlimited
SDLC (TSS or HPTSS)	Unlimited
FR physical (TSS or HPTSS)	200
FR logical (TSS or HPTSS)	Unlimited
ESS	Unlimited
CSS	Unlimited

CSS line trace

The CSS line trace records information from the data exchanged between NCP and the 3746 Model 900 and from the data in the following interface control blocks:

- CSS-processor-to-NCP dynamic parameter status area (LDPSA)
- CSS-processor-to-NCP parameter status area (LPSA)
- NCP-to-CSS-processor dynamic parameter status area (NDPSA)
- NCP-to-CSS-processor parameter status area (NPSA)

See “CSS line trace report (CSPRT)” on page 23 for a sample ACF/TAP report.

Figure 3 on page 9 shows the relationship of the connectivity subsystem line trace to NCP and to the hardware. It also shows the CSS adapter trace trace-point sources. For more information, see "CSS adapter trace" on page 15.

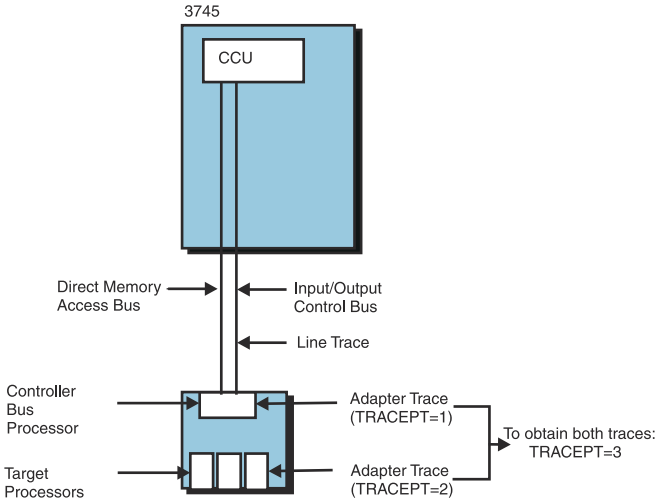

Figure 3. Relationship of the CSS line trace to NCP and to the 3746 Model 900 hardware

Activate and deactivate this trace from the VTAM console as a LINE.

You can request a trace of a logical or physical line. Physical line trace data includes commands for the physical line and for the associated logical lines. Logical line trace data includes only commands and associated data directed to logical resources for that line.

For integrated services digital network (ISDN), you can request a trace of a logical, B-channel, or physical line. Physical line trace data includes commands for the physical line, the associated B-channel lines, and the associated logical lines. B-channel line trace data includes commands for the B-channel line and the associated logical lines. Logical line trace data includes only commands for the logical line.

Before V7R5, a high-speed line trace can be activated only when no other line traces (high-speed or low-speed) are active. 3746 Model 900 lines that are considered high speed are the following:

- Logical and physical Enterprise systems connection (ESCON) or token-ring lines
- SDLC, frame-relay, or X.25 lines with SPEED=1048576 or greater on the LINE definition statement
- A logical frame-relay line that does not have the SPEED keyword coded but has an associated physical line that is coded with SPEED=1048576 or greater.

Starting with V7R5, you can activate more than one CSS line trace even when a line trace is active for a high-speed line. The number of line traces that can be active at one time is limited by the LTRACE keyword on the BUILD statement, which has the maximum value 8.

For high-speed 3746 Model 900 lines, the amount of data to be traced for receive and transmit PIUs is limited to a maximum of 40 bytes. Starting with V7R5, the amount of data to be traced for the 3746 Model 900 lines is unlimited.

For the layout descriptions of the interface control blocks shown in the CSS line trace, see the *NCP and EP Reference Summary and Data Areas*, LY43-0030.

NTRI line trace and NTRI IOH trace

You can run the NCP/Token-Ring interconnection (NTRI) physical line trace and NTRI IOH trace using the same methods as the NCP line trace. The NTRI physical line trace and the NTRI IOH trace always run at the same time. To trace IOHs only (no line trace data), specify 0 for the COUNT parameter of the trace activation command.

NCP V6R2 and later

NTRI logical lines can also be traced. Only one type of NTRI line trace can be activated at a time. If an NTRI line trace is active, either physical or logical, a second activation request for NTRI physical or logical line trace is not allowed. The NTRI logical line trace can be activated on a logical line that is not active, but no data is traced until after a connection that uses the logical line has been established and link-level data is transmitted. For incoming connections, the following data is not traced:

- Test command sent by the device
- Test response sent by NCP
- First XID sent by the device

For outgoing connections, the test response from the adjacent station is not traced, but the test command sent by NCP and all other data that follows the test response from the adjacent station is traced.

The NTRI IOH trace records the IOHs dedicated to a particular TIC and the token-ring multiplexer (TRM) that controls the TIC. Only those IOHs issued by level 2 and level 3 NTRI code are traced. IOHs that are tried again by level 1 NTRI code are not traced, but because they are tried again, a box event record (BER) is produced and sent to the maintenance and operator subsystem (MOSS).

NCP V5R3 and later

For the NTRI physical line trace, the COUNT parameter of the trace activation command specifies the amount of data to be traced. If the value of COUNT is a value in the range 200 to 254, 200 bytes are traced. If the value of COUNT is 255, 38 bytes (the default) are traced. Specify 0 for COUNT to trace IOHs only (no line trace data).

NTRI line trace and NTRI IOH trace elements appear in chronological order. When the trace elements are edited, the NTRI IOH trace elements get a specific header to distinguish them from the NTRI line trace elements. For information regarding the trace element formats, see *NCP and EP Reference Summary and Data Areas* LY43-0030.

Running the NCP line traces

If you want to start the NCP or CSS line trace at the same time as the access method, request the trace in the access method during assembly; otherwise, list the trace and appropriate options from the system console during startup. For more information about starting the NCP or CSS line trace during startup, see z/OS Communications Server: SNA Operation.

If you want to start the NCP or CSS line trace from the host processor, issue the appropriate command for your access method after VTAM is started.

The ACTTRACE PIU of the NCP line trace activates the NTRI traces. The NTRI IOH trace starts automatically with the NTRI line trace. The DEACTTRACE PIU of the line trace, slowdown state, or ANS deactivates the NTRI traces.

You can activate VTAM traces when VTAM is started or as needed. Use the TRACE option on the START command to begin the trace when VTAM is started. Use the MODIFY TRACE command to begin the trace when VTAM is already running. The TRACE start option and the MODIFY TRACE command have additional parameters unique to the type of trace being started.

Before you start the line trace for VTAM, start the generalized trace facility (GTF) with the USR option; otherwise, none of the trace data is recorded. For information about starting GTF, see z/OS MVS Diagnosis: Tools and Service Aids.

You can stop the NCP, CSS, and NTRI line traces with the same procedure you used to start them. To stop the trace from the host processor, specify the NOTRACE parameter of the MODIFY command.

For more information about line traces, the TRACE option of the START command, and the MODIFY TRACE command, see z/OS Communications Server: SNA Operation.

To interpret and print trace data, see the ACF/TAP information in Chapter 1, “ACF/TAP and trace data,” on page 1.

The PRDMP system service aid to print the NCP line trace data is not supported for the IBM 3720, 3725, and 3745 Communication Controllers. For more information about PRDMP, see z/OS Communications Server: SNA Diagnosis Vol 2, FFST Dumps and the VIT.

NCP transmission group trace

An NCP transmission group trace records the activity on all lines contained in a transmission group as if they were a single logical line, including lines in a token ring. The access method and NCP share this trace function. The access method controls, formats, and prints the trace, whereas NCP gathers the information in the trace records. For a detailed explanation of how this trace operates, see *NCP and EP Reference*, LY43-0029.

Table 3 on page 11 shows the number of bytes the NCP transmission group trace records for each PIU.

Table 3. Number of bytes recorded for each PIU

Resource	Number of bytes recorded
Middle or last segment PIUs	(TH byte 16 = B'xxxx 0xxx'): (TH + 6 bytes)
PIUs sent to/from a non-SNA device	(TH byte 16 = B'xxx0 xxxx'): (TH + RH + 7 bytes)
Function management data (FMD) unformatted data PIUs	(RH byte 00 = B'x00x 0xxx'): (TH + RH bytes)
FMD formatted data PIUs	(RH byte 00 = B'x00x 1xxx'): (TH + RH + 6 bytes)
All other PIUs	(TH + RH + RU bytes, not to exceed 4096 bytes for any single PIU) See table note.
Note: Because all PIUs that flow over a transmission group are FID4s, the transmission group references are to the FID4 transmission header.	

For NCP V5R3 and later, when blocked PIUs are received by NCP, the first PIU in the block is traced. Then the PIUs are unblocked and each of the PIUs are traced individually, which causes the first PIU in the block to be traced twice.

Running the NCP transmission group trace

If you want to start the transmission group trace during startup, list the trace and appropriate options from the system console during startup. For more information about starting the NCP transmission group trace during startup, see z/OS Communications Server: SNA Operation.

If you want to start the trace from the host processor, issue the appropriate command for your access method after VTAM is started.

You can activate VTAM traces when VTAM is started or as needed. Use the TRACE option on the START command to begin the trace when VTAM is started. Use the MODIFY TRACE command to begin the trace when VTAM is already running. The TRACE start option and the MODIFY TRACE command have additional parameters unique to the type of trace being started.

Before you start the transmission group trace for VTAM, start the generalized trace facility (GTF) with the USR option; otherwise, none of the trace data is recorded. For information about starting GTF, see z/OS MVS Diagnosis: Tools and Service Aids.

You can stop the NCP transmission group trace with the same procedure you used to start the trace. To stop the trace from the host processor, specify the NOTRACE parameter of the MODIFY command.

For more information about the transmission group trace, TRACE start option, and MODIFY TRACE command, see z/OS Communications Server: SNA Operation.

To interpret and print trace data, see ACF/TAP information in Chapter 1, “ACF/TAP and trace data,” on page 1.

The PRDMP system service aid to print the NCP line trace data is not supported for the IBM 3720, 3725, and 3745 Communication Controllers. For more information about PRDMP, see z/OS Communications Server: SNA Diagnosis Vol 2, FFST Dumps and the VIT.

NCP generalized PIU trace

The NCP GPT records the flow of path information units (PIUs) exchanged between NCP and its attached resources. It is similar to the NCP line trace except that it records only PIU activity. Also, it records status entries that show the exchange of ACTIVATION and DEACTIVATION commands for specific resources, virtual route inoperative (VRINOP) conditions, lost trace data (within NCP), and the start of a session for a specific logical unit. Trace data and status records are sent to the access method for logging and printing.

When you activate a generalized PIU trace (GPT), it works on a hierarchical basis, tracing the indicated resource and all resources below it. Starting or stopping the trace for a logical unit is done only for that resource. Running GPT for a physical unit traces PIUs for the physical unit and all the logical units associated with the physical unit. Running GPT for a link traces PIUs for the link, all physical units on the link, and all logical units associated with all the physical units.

The number of bytes GPT records differs according to resource type. The PIU is traced in FID4 format. However, if the PIU is a Function Management Header 5 (FMH5) ATTACH RU, GPT records a maximum of 254 bytes. These 254 bytes include 26 bytes of TH, 3 bytes of RH, and up to 225 bytes of FMH5 data. The FMH5 data traced by GPT does not include application data; application data is not traced by GPT. For GPT to trace FMH5 RUs, GPT must be activated for a logical unit. If GPT is activated for a physical unit or link, GPT records only 40 bytes of FMH5. GPT must be activated on the logical unit to produce the data necessary for the GPT index report created by ACF/TAP.

Table 4 on page 12 shows how the number of bytes GPT records differs with each resource.

Table 4. Number of bytes recorded by GPT for each resource

Resource	Number of bytes recorded
SNA peripheral logical unit	40 (TH + RH + 11 bytes of RU) [1], [2]
SNA peripheral physical unit	40 (TH + RH + 11 bytes of RU) [1]
SNA link	40 (TH + RH + 11 bytes of RU) [1]
Binary synchronous communication (BSC) terminal	44 (TH + RH + 15 bytes of RU) [1]
BSC communication controller	44 (TH + RH + 15 bytes of RU) [1]
BSC line	44 (TH + RH + 15 bytes of RU) [1]
Programmed logical unit	40 (TH + RH + 11 bytes of RU) [1]
Programmed physical unit	40 (TH + RH + 11 bytes of RU) [1]
Programmed virtual link	40 (TH + RH + 11 bytes of RU) [1]
NCP physical unit	40 (TH + RH + 11 bytes of RU) [1]

[1] TH is 26 bytes; RH is 3 bytes.

[2] 40 bytes are traced if the dummy-bind required bit is off. If the dummy-bind-required bit is on, up to 254 bytes (TH + RH + up to 225 bytes of FMH5) are traced. The dummy-bind-required bit is turned on when GPT is activated for a specific logical unit in which the physical unit and line do not have GPT active. The dummy-bind-required bit is turned off when GPT is activated for the logical unit's physical unit or line or when GPT is deactivated.

Use GPT to verify that the communication controller sends and receives the correct data to and from a station. GPT can also be used for activate or deactivate, hung session or resource, or performance problems.

For NCP V4R2 and later, use GPT to determine the module that issued a negative response. The module name and offset is stored in the negative response buffer. GPT traces the module name and offset if the PIU is a negative response but does not return this information in the negative response itself, which looks exactly as it has in the past.

Running generalized path information unit trace

Start generalized path information unit trace (GPT) from the host processor. Only one host processor at a time can start GPT. A request to start the trace from a second host processor is rejected if the trace is still active from another host processor. However, the same host processor can issue several start trace requests for different resources. Buffer and cycle utilization considerations limit the maximum number of resources that can be traced at the same time.

Stop the trace using the same procedure you used to start the trace. Specify the OFF parameter on the MODIFY command.

You can activate VTAM traces when VTAM is started or as needed. Use the TRACE option on the START command to begin the trace when VTAM is started. Use the MODIFY TRACE command to begin the trace when VTAM is already running. The TRACE start option and the MODIFY TRACE command have additional parameters unique to the type of trace being started.

Before you start GPT for VTAM, start the generalized trace facility (GTF) with the USR option. For information about starting GTF, see z/OS MVS Diagnosis: Tools and Service Aids.

For more information about GPT, the TRACE start option, and the MODIFY TRACE command, see z/OS Communications Server: SNA Operation.

To interpret and print trace data, see ACF/TAP information in Chapter 1, “ACF/TAP and trace data,” on page 1.

VTAM buffer contents trace

The VTAM buffer contents trace records the contents of message buffers as VTAM sends and receives PIUs. It confirms the order of data as it passes between an application program and a logical unit. It also records all data passing to and from an application program.

Buffer save on PIUs that are out of sequence

This buffer save retains the head buffers of PIUs that arrive out of sequence on a virtual route. It provides important information contained in the head buffers of the first PIU that is out of sequence and the next 10 PIUs. These buffers are placed on an A-chain for easy access. Use these buffers to determine which product and module caused the PIUs to go out of sequence. If the virtual route is deactivated and reactivated or if a PIU is received in sequence after the 11th head buffer is saved on the A-chain, the head buffers on the A-chain are released.

Buffer lease verification

As buffers are leased, an indicator records the reason for leasing. The data identifies the parameter or status area control block (PSA) for which the buffers are leased and some of the PSA status indicators. This buffer leasing information is saved in the beginning of the buffer's data section; however, it is overwritten unless the buffer is meant to contain the head buffer of the next PIU to be received.

Buffer trace capture of NMVTs

You can run a VTAM buffer trace on an SSCP-PU session to capture network management vector transports (NMVTs) flowing between NCP and VTAM. This trace is useful when you do not have the NetView program and you would like to obtain the NMVT alert data.

See *NCP and EP Reference Summary and Data Areas*, LY43-0030. for detailed alert data.

Running the VTAM buffer contents trace

You can activate VTAM traces when VTAM is started or as needed. Use the TRACE option on the START command to begin the trace when VTAM is started, or use the MODIFY TRACE command to begin the trace when VTAM is already running. The trace start option and the MODIFY TRACE command have additional parameters unique to the type of trace being started. For more information about using the trace start option and the MODIFY TRACE command, see z/OS Communications Server: SNA Operation.

Before you start the VTAM buffer contents trace, start GTF with the USR option; otherwise, none of the trace data is recorded. For information about starting GTF, see z/OS MVS Diagnosis: Tools and Service Aids.

For more information about the VTAM buffer contents trace, the TRACE start option, and MODIFY TRACE command, see z/OS Communications Server: SNA Operation.

To interpret and print trace data, see ACF/TAP information in Chapter 1, “ACF/TAP and trace data,” on page 1.

Scanner interface trace

If your lines are attached to a 3746 Model 900, see “CSS adapter trace” on page 15.

The access method, the scanner microcode, and NCP share the SIT. Although the access method controls the trace, the scanner microcode gathers information in the trace records and passes it to NCP. NCP then passes it to the host access method. Scanner interface trace (SIT) records the operating parameters of a line whenever the communication controller sends or receives data. SIT records outbound data after NCP processes it. It also records inbound data before it is passed to NCP. If you run SIT on an inactive line attached to the communication controller, this SIT does not collect data. See *NCP and EP Reference*, LY43-0029 for information about how SIT operates.

SIT or line traces can be active for up to eight half-duplex (HDX) lines or four full duplex (FDX) lines at a time for each communication controller. For high-speed links that use a type 2, type 3, or type 4B LIC, you can activate only two SIT or line traces for HDX lines on a scanner. For a high-speed link that is an FDX line and uses a type 2, type 3, or type 4B LIC, you can activate a SIT on only one scanner on an IBM 3745 at a time (one line trace for each communication controller). You can trace only 40 bytes of data for each IBM 3745 using HPTSS lines.

Type 12 LIC
Links that use a type 12 LIC are also considered high speed.

ESS lines on the IBM 3745
You can trace ESS lines on the IBM 3745; however, you can activate a SIT on only one scanner (one line trace for each communication controller) at a time. You can trace up to 254 bytes of data for each ESS line. When a count of X'FF' is specified, 42 bytes of data are traced for ESS lines.

The number of allowable active SITs is specified during NCP generation. In a multisystem network, where the communication controller is connected to more than one host processor, the number of active traces allowed is distributed among the connected host processors. As the number of active SITs increases, system performance becomes less efficient.

TIC internal trace

The TIC internal trace gathers information about the internal processes of the TIC and reports it to the host. TIC replaces the communication scanner processor (CSP) in the IBM 3725 Communication Controller for communicating with the IBM token-ring network. Therefore, when you specify a SIT for an address that is a TIC instead of a scanner, you receive a TIC internal trace, unless you are using user-written code; the TIC internal trace is not supported for user- written code.

Activate and deactivate this trace from the VTAM console as a SIT. The TIC internal trace is supported for physical links only. For performance reasons, only one TIC internal trace and one NTRI line trace can be run on an NTRI resource at the same time. If you have a (LPDA) problem, you cannot use the TIC internal trace because the token ring is physically attached to the communication controllers.

CSS adapter trace

The CSS adapter trace gathers information from the 3746 Model 900 hardware. The trace contains two types of information:

- Component-to-component inside the 3746 Model 900
- Information flowing from the 3746 Model 900 to your network

You can use this trace to record data from either or both of the following sources:

- The controller bus processor:
  - Controller bus and service processor (CBSP)
  - Controller bus and token ring processor (CBTRP))
- The target processor:
  - Token ring processor (TRP)
  - Communication line processor (CLP) which supports; SDLC, frame-relay, ISDN, and X.25 lines
  - ESCON processor (ESCP).

Activate and deactivate this trace from the VTAM console as a SIT.

CSS adapter trace can be started for a high speed line only when CSS adapter trace is not active for any other line (high speed or low speed). 3746 Model 900 lines that are considered high speed are:

- Logical and physical ESCON or token-ring lines
- SDLC, frame-relay, ISDN, or X.25 lines with SPEED=1048576 or greater on the LINE definition statement
- A logical frame-relay line that does not have the SPEED keyword coded but has an associated physical line that is coded with SPEED=1048576 or greater

You can request a trace of a logical or physical line. Physical line trace data includes commands for the physical line and for the associated logical lines. Logical line trace data includes only commands and associated data directed to logical resources for that line.

For integrated services digital network (ISDN), you can request a trace of a logical, B-channel, or physical line. Physical line trace data includes commands for the physical line, the associated B-channel lines, and the associated logical lines.

B-channel line trace data includes commands for the B-channel line and the associated logical lines. Logical line trace data includes only commands for the logical line.

The data from this trace helps you isolate a problem. You can use it with the CSS line trace data to determine if a problem is with NCP, the controller bus processor, or the target processor

When NCP enters pseudo-slowdown, it suspends the transfer of CSS SIT trace data from the CSS to NCP. As long as NCP continues to operate in pseudoslowdown, the CSS suspends all trace activity and enters a `trace data lost` message in the SIT trace data records. The SIT trace terminates if NCP enters slowdown, receives a deactivation request, or trace activity is suspended for more than three minutes. If NCP exits pseudo-slowdown to continue normal processing, it resumes the transfer of CSS SIT trace data from the CSS.

Figure 4 on page 16 shows the relationship of the 3746 Model 900 CSS adapter trace to NCP and to the hardware. For more information, see “CSS line trace” on page 8.

Figure 4 on page 16 also shows the MODIFY TRACE trace-point values for each of the two sources. You can request a trace of both sources by specifying TRACEPT=3 on the MODIFY TRACE command.

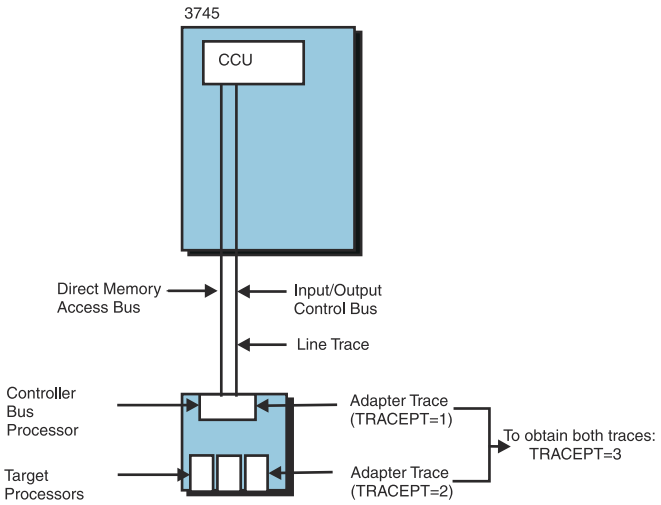

Figure 4. Relationship of the CSS adapter trace to NCP and to the 3746 Model 900 hardware

ISDN physical lines represent both the ISDN D-channel and the entire physical connection to the ISDN network. To collect only ISDN D-channel signaling information, TRACEPT=4 can be specified for an ISDN physical line.

For more information about the MODIFY TRACE command, see z/OS Communications Server: SNA Operation. For sample reports, see "CSS adapter trace reports" on page 168.

Running the SIT, TIC internal trace, and CSS adapter trace

Start SIT from the host processor.

The ACTTRACE PIU for the SIT activates the TIC internal trace. When NTRI receives a DACTTRACE PIU to deactivate SIT, it deactivates the TIC internal trace.

The TIC internal trace is not deactivated in case of discontact (CLOSE) or deactlink SNA commands, but is deactivated in case of slowdown.

For CSS adapter trace, after a CSS adapter trace is started on a trace point, a second adapter trace cannot be started even if the request is for a different trace point. If running a CSS trace on a logical line, the logical line must be active.

Restriction: NCP does not support SIT for communication lines that are driven by user-written line-control code, unless the UACBs are compatible with NCP's ACBs. The request to start or stop SIT is passed to the user-written I/O code. At that point, user-written code must support the trace. NCP handles line trace requests for user-written line control if it is compatible and COMPACB=YES is specified on the GROUP definition statement.

You can activate VTAM traces when VTAM is started or as needed. Use the TRACE option on the START command to begin the trace when VTAM is started. Use the MODIFY TRACE command to begin the trace when VTAM is already running. The TRACE start option and the MODIFY TRACE command have additional parameters that are unique to the type of trace.

For more information about SIT, the TRACE start option, and the MODIFY TRACE command, see z/OS Communications Server: SNA Operation. To interpret and print trace data, see ACF/TAP information in Chapter 1, "ACF/TAP and trace data," on page 1.

Before you start SIT for VTAM, start the GTF trace with the USR option. For information about GTF, see z/OS MVS Diagnosis: Tools and Service Aids.

Chapter 3. Starting and running ACF/TAP

This topic describes the commands and procedures to start and run ACF/TAP.

For information about output report and control parameters, see Chapter 4, “ACF/TAP parameters,” on page 21.

ACF/TAP commands

You can enter the following commands from the operator's console or include them in the data set or input file:

GO
Use this command to start the process that produces output reports from trace files.

Restriction: You must make changes to output report and control parameters before entering this command.

LIST
Use this command to display, on the operator console, all messages describing the current parameters.

PROMPT
Use this command to stop ACF/TAP from reading parameters from the data set or input file and displaying the DSJ081I message. This message notifies the user that a PROMPT command was issued from the data set or input file and requests additional input from the operator console.

QUIT
Use this command to stop ACF/TAP operation.

READ
Use this command to start reading parameters from the SYSIN data set or input file.

RESET
Use this command to reset all control parameters to their default values.

Running ACF/TAP

Use the JCL sample in Figure 5 on page 18 to assist you in creating and tailoring ACF/TAP for your specific environment:

```
//ACFTAP    JOB    (account info),'name'
//ACFTAP    PROC   OUT='*',UNITNME=sysda,MIGLIB=SYS1.MIGLIB,
//             SORTLIB='sys1.sort.sortlib',VOL='vol',SORTWK='sortwk'
//*********************************************************************
//*********************************************************************
//**                                                                 **
//**       PROCEDURE:   ACF/TAP                                      **
//**                                                                 **
//**       FUNCTION:    RUN ACF/TRACE ANALYSIS PROGRAM               **
//**                                                                 **
//**       NOTE:                                                     **
//**            CHANGE ALL LOWER CASE CHARACTERS TO VALUES           **
//**            SUITABLE FOR YOUR INSTALLATION.                      **
//**                                                                 **
//**        SYMBOLIC PARMS:                                          **
//**           OUT      :  SYSOUT CLASS                              **
//**           UNITNME  :  UNITNAME FOR TEMPORARY DATA SETS          **
//**           MIGLIB   :  LIBRARY CONTAINING ACF/TAP                **
//**           SORTLIB  :  LIBRARY CONTAINING MVS SORT ROUTINE       **
//**           VOL      :  VOLUME OF TAPE                            **
//**           SORTWK   :  UNIT NAME FOR SORT ROUTINE                **
//**                                                                 **
//**        FOR MORE INFORMATION ABOUT THIS JCL SEE SNA ACF/TAP Trace **
//**        TRACE ANALYSIS HANDBOOK                                  **
//*********************************************************************
//ACFTAP    EXEC   PGM=ACFTAP,REGION=1M
```

© Copyright IBM Corp. 2000, 2025

```
//*********************************************************************
//**  LIBRARY CONTAINING ACFTAP ROUTINE                              **
//*********************************************************************
//STEPLIB   DD     DSN=&MIGLIB,DISP=SHR                              **
//*********************************************************************
//**  LIBRARY CONTAINING MVS SORT ROUTINE                            **
//*********************************************************************
//SORTLIB   DD     DSN=&SORTLIB,DISP=SHR
//*********************************************************************
//**  DATA SETS USED FOR SORTING                                     **
//*********************************************************************
//SORTIN    DD DSN=TAPSORTI.DATA.TAP,UNIT=&UNITNME,
//             SPACE=(CYL,(10,5)),DISP=(NEW,DELETE),
//             DCB=(RECFM=F,LRECL=364,BLKSIZE=364)
//SORTOUT   DD DSN=TAPSORTO.DATA.TAP,UNIT=&UNITNME,
//             SPACE=(CYL,(10,5)),DISP=(NEW,DELETE),
//             DCB=(RECFM=F,LRECL=364,BLKSIZE=364)
//SORTWK01  DD DSN=&&TEMPD5,UNIT=&SORTWK,
//             SPACE=(CYL,(10,5),,CONTIG),
//             DISP=(NEW,DELETE)
//*********************************************************************
//**  TEMPORARY DATA SETS                                            **
//*********************************************************************
//SYSTEMP1  DD DSN=TAPTEMP1.DATA.TAP,UNIT=&UNITNME,
//             SPACE=(CYL,(10,5)),DISP=(NEW,DELETE),
//             DCB=(RECFM=F,LRECL=284,BLKSIZE=284)
//SYSTEMP2  DD DSN=TAPTEMP2.DATA.TAP,UNIT=&UNITNME,
//             SPACE=(CYL,(10,5)),DISP=(NEW,DELETE),
//             DCB=(RECFM=F,LRECL=284,BLKSIZE=284)
//*********************************************************************
//**  DIAGNOSTIC OUTPUT                                              **
//*********************************************************************
//*SYSUDUMP  DD     SYSOUT=&OUT      //*SYSABEND  DD     SYSOUT=&OUT
//*********************************************************************
//**  ACFTAP REPORTS                                                 **
//*********************************************************************
//SYSLDPRT  DD     SYSOUT=&OUT
//SYSLSPRT  DD     SYSOUT=&OUT
//SYSGSPRT  DD     SYSOUT=&OUT
//SYSSDPRT  DD     SYSOUT=&OUT
//SYSSSPRT  DD     SYSOUT=&OUT
//SYSNEPRT  DD     SYSOUT=&OUT
//SYSDTPRT  DD     SYSOUT=&OUT
//SYSVTPRT  DD     SYSOUT=&OUT
//SYSLUPRT  DD     SYSOUT=&OUT
//SYSPRINT  DD     SYSOUT=&OUT
//SYSIXPRT  DD     SYSOUT=&OUT
//SYSNTPRT  DD     SYSOUT=&OUT
//SYSNPPRT  DD     SYSOUT=&OUT
//SYSCSPRT  DD     SYSOUT=&OUT
//SYSCAPRT  DD     SYSOUT=&OUT
//SYSFRPRT  DD     SYSOUT=&OUT
//*********************************************************************
//**  TRACE INPUT FILE                                               **
//*********************************************************************
//SYSTRACE  DD DISP=(OLD,KEEP),UNIT=&UNITNME,VOL=SER=&VOL,LABEL=(,NL)
//*********************************************************************
//**  SORT/MERGE MESSAGE DATASET                                     **
//*********************************************************************
//SYSOUT    DD     SYSOUT=&OUT
//*********************************************************************
//PROCEND   PEND //STEP1     EXEC ACFTAP
//*********************************************************************
//**  ACF/TAP PARAMETERS                                             **
//*********************************************************************
//SYSIN     DD     *
parameters
parameters
See the chapter of parameters for more information about ACF/TAP parameters
/*
```

Figure 5. Sample ACF/TAP procedure

Notes:

1. For the data set entries shown in lowercase, the specified information must be supplied.
2. ACF/TAP commands and parameters entered in the SYSIN data set must begin in column 1 (position 1).

3. The //SYSIN statement and control parameter data (for example, INPUT=LINE) can be omitted from the JCL. If it is, ACF/TAP prompts you to enter parameters from the operator's console.
4. ACF/TAP requires an MVS system sort program to produce the GPT index report (IXPRT) and the line trace summary report (LSPRT).
5. The SORTIN, SORTOUT, and SORTWK01 DD statements are required only if IXPRT=YES or if LSPRT=YES.

Entering commands and parameters

When ACF/TAP starts, the following messages appear on the operator's console:

```
DSJ001I ACFTAP EXECUTION BEGINS
DSJ021I PARAMETERS ARE RESET TO DEFAULT STATUS
DSJ020A ENTER ACFTAP PARAMETERS OR READ, QUIT, LIST, GO, RESET
```

In response to these messages, enter `reply xx,command` or `reply xx,parameter=value`. Where the following values have these meanings:

xx
Is the MVS system reply ID.

command
Is a valid ACF/TAP command.

parameter = value
Is a valid ACF/TAP parameter and value.

For more information about commands, see "ACF/TAP commands" on page 17. For more information about parameters, see Chapter 4, "ACF/TAP parameters," on page 21.

If a READ command is entered, ACF/TAP runs the commands and parameters listed in the SYSIN data set. However, it is not necessary to enter the READ command from the operator's console before the SYSIN statement can be read. After the JCL is read or entered from the console, enter the GO and QUIT commands. You can enter these commands from the console or inserted in the JCL. If the QUIT command is entered immediately following the GO command, in the SYSIN data set, ACF/TAP does not prompt the system operator.

After each entry from the operator's console, ACF/TAP responds with the following messages:

```
DSJ020A ENTER ACFTAP PARAMETERS OR READ, QUIT, LIST, GO, RESET
DSJ029I message text shows the entry from the console.
```

If you make a syntax error while entering parameters, message `DSJ029I` is followed by message `DSJ028I`.

The vertical indicator (|) points to the approximate location in message `DSJ029I` where ACF/TAP stopped scanning the entry because of a syntax error. However, if the parameters are read from the SYSIN data set and a syntax error is detected, message `DSJ089I` prints in place of message `DSJ029I`.

Chapter 4. ACF/TAP parameters

This topic describes the Advanced Communications Function/Trace Analysis Program (ACF/TAP) output report and control parameters. Using these parameters, you can obtain output reports with specific input trace data.

Parameter conventions

The following conventions apply to the ACF/TAP control parameters unless otherwise specified:

- If a parameter is not entered, ACF/TAP uses the previously entered value or the default value.
- Blanks and commas are delimiters.
- At least one delimiter must appear between parameters.
- The maximum length of an input line is 72 characters.
- Multiple lines can be entered; however, no parameter can be continued from one line to another.
- For YES or NO values the initials Y and N are not accepted. They must be entered as YES or NO.
- If you make a mistake when you are entering parameters, you can re-enter them. The parameter that is used is the last value that you enter. However, some parameters are cumulative and must be reset before you can correct them. Following is a list of these parameters:
  - BFFRNODE
  - GPTNODE
  - NODE
  - CSATYPE
  - LCN
  - CTLRNODE
  - LINENODE
  - VITTYPE
  - DLCI
  - LOGADDR

To reset a parameter to its default value, either enter the parameter without a value (parameter=) or omit the parameter.

Input lines beginning with an asterisk (*) are ignored and can be used as comment lines.

Output report parameters

This topic describes the contents of the output reports and their parameters. You can request any number of reports each time you run ACF/TAP. See Figure 1 on page 4 to see the trace data that can be produced on each report.

See “Output report format” on page 21 for information about NCP version and release levels and their affects on output report formatting.

Output report format

Some ACF/TAP output report data and formatting is dependent on the level of NCP that is installed. Use the following information to determine whether the NCP that you have installed is listed, and what affect it has on the output reports.

The trace data file element addresses are organized in the order of appearance in reports:

© Copyright IBM Corp. 2000, 2025

- LAN line trace (NTPRT)
- Line trace detail (LDPRT)
- Network data traffic (DTPRT)
- Network error (NEPRT)
- SNA detail (SDPRT)
- SNA summary (SSPRT)

Both Internet and SNA traffic, in support of Internet Protocol routing over token rings, are shown in:

- Line trace detail (LDPRT)
- LAN line trace (NTPRT)

Data for frame-relay peripheral links are formatted in:

- Line trace detail (LDPRT)
- Line trace summary (LSPRT)
- SNA detail (SDPRT)
- SNA summary (SSPRT)

VTAM full buffer trace and network qualified names features are formatted in full on the SYSPRINT report and truncated to a maximum of 256 bytes on all other applicable reports.

LONGPIU=YES can be specified when formatting a VTAM full buffer trace, and up to 4096 bytes of data is formatted on the applicable reports. The complete data is still printed on the SYSPRINT report if DUMP=YES is specified.

CSS adapter trace report (CAPRT)

For each CSA line trace record, this report shows: trace record number, trace type, a hexadecimal format dump, and a translation of each element. Possible trace elements are:

- Controller bus adapter (CBA)
- Common and specific mappers (MAPR)
- ESCON adapter (ESCA)
- Token ring adapter (TRA)
- Communication line adapter (CLA)
- Controller bus processor (CBP)
- Frame-relay transmit, receive and internal trace (FRLY)
- X.25 transmit and receive SIT (X25) ISDN adapter (ISDN)

Each element is interpreted for commands and error conditions.

```
►►─┬─ CAPRT=YES ─┬──────────────────────────────────►◄
   └─ CAPRT=NO ──┘
```

See “CHARCODE parameter” on page 34 for translation options.

YES
This is the default if a value is not specified or the parameters are reset. All data applicable to this report is formatted.

NO
If this value is specified, the report is not processed.

CSS line trace report (CSPRT)

For each CSS line trace record this report shows the trace record number, trace type, a hexadecimal format dump and a translation of each element. Each element is interpreted for commands and error conditions. Possible trace elements are:

- Extended control block flag byte (ECB)
- CSS processor-to-NCP dynamic parameter status area (LDPSA)
- CSS processor-to-NCP parameter area (LPARM)
- CSS processor-to-NCP parameter status area (LPSA)
- CSS processor-to-NCP status area (LSTAT)
- NCP-to-CSS processor dynamic parameter status area (NDPSA)
- NCP-to-CSS processor parameter area (NPARM)
- NCP-to-CSS processor parameter status area (NPSA)
- NCP-to-CSS processor status area (NSTAT)
- Receive data (RDATA)
- Transmit data (XDATA)

See “CHARCODE parameter” on page 34 for translation options.

```
►►─┬─ CSPRT=YES ─┬─►◄
   └─ CSPRT=NO ──┘
```

YES
This is the default if a value is not specified or the parameters are reset. All data applicable to this report is formatted.

NO
If this value is specified, the report is not processed.

Frame-relay logical line trace summary report (FRPRT)

The frame-relay logical line trace summary report (FRPRT) displays a summary of the frame-relay logical line trace data.

See “CHARCODE parameter” on page 34 for translation options.

```
►►─┬─ FRPRT=NO ─┬─►◄
   └─ FRPRT=YES ┘
```

NO
This is the default if a value is not specified or the parameters are reset. The report is not processed.

YES
If this value is specified, all data applicable to this report is formatted.

GPT index report (IXPRT)

This report formats single conversations of independent logical units. It contains an index that shows session initiation and identification (dummy BINDs that contain the network address pair and fully qualified PCID), and conversation allocations (FMH5s) grouped by session. Each function management header 5 (FMH5) is accompanied by its ACF/TAP record number that isolates the conversation to be formatted.

If YES is specified, the value for all other output reports is set to NO, the INPUT parameter is set to GPT, and NODE selection processing is bypassed.

To produce this report a system sort program is required.

```
►►─┬─ IXPRT=NO ─┬─►◄
   └─ IXPRT=YES ─┘
```

NO
This is the default if a value is not specified or the parameters are reset. If this value is specified, the report is not processed.

YES
All data applicable to this report is formatted.

GPT summary report (GSPRT)

This report produces a summary of each GPT status or data record. Each element is on a single line and contains the link, cluster, and resource addresses. Status elements are analyzed and contain a message describing the results. Data elements are shown in hexadecimal format and show the request/response unit command. See "How ACF/TAP supports GPT data" on page 2 for additional information about GPT support.

```
►►─┬─ GSPRT=YES ─┬─►◄
   └─ GSPRT=NO ─┘
```

YES
This is the default if a value is not specified or the parameters are reset. All data applicable to this report is formatted.

NO
If this value is specified, the report is not processed.

LAN line trace report (NTPRT)

Depending on the formatted trace data, the following information is shown in the NTPRT report:

- Line address
- Whether the data is *receive* or *transmit*
- Destination and source addresses
- Transmitter *send* and *receive* sequence numbers
- Routing information
- Whether it is a command or response
- Poll/Final bit.

```
►►─┬─────────── NTPRT=NO ──────────┬─►◄
   │                               │
   └─ NTPRT= ─┬─ YES ─┬─┬─────────┬─┘
              │       │ │         │
              ├─ FRLY ─┤ │         │
              │       │ │         │
              ├─ IP ───┤ │         │
              │       │ │         │
              └─ NTRI ─┘ │         │
                         │         │
                         └─────────┘
```

NO
This is the default if a value is not specified or the parameters are reset. If this value is specified, the report is not processed.

YES
All FRTR, IP, and NTRI record types are selected for processing.

FRLY
Only frame-relay token-ring record types are processed.

IP
ENET (ARP and IP), 802.3, 802.3 (ARP and IP), token-ring (IP and ARP), and FRTR record types are processed.

NTRI
Only NTRI (physical and logical) record types are processed.

Line trace detail report (LDPRT)

This report shows Ethernet, frame-relay, IP, NCP, SIT, NTRI, or X.25 line trace data.

SIT and CSP normal mode trace elements are of variable length, depending on the element type. This report contains a detailed analysis of the status elements. Parameter, IOH, transmit, receive, and checkpoint elements are shown in hexadecimal format and character format. CSP character mode trace elements are shown in detail with one element per line.

NTRI trace elements are variable length IOH, transmit, and receive line trace elements. They are shown one element per line, in hexadecimal format and character format.

See “CHARCODE parameter” on page 34 for translation options.

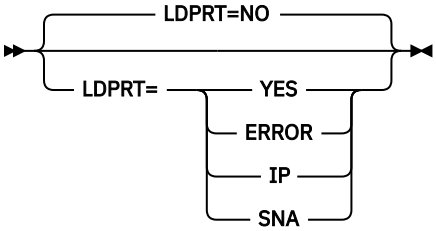

NO
This is the default if a value is not specified or the parameters are reset. If this value is specified, the report is not processed.

YES
All data applicable to this report is formatted.

ERROR
Only ACF/TAP-defined error or exception conditions are reported. This option is not available for the normal-mode line trace or SIT.

IP
Only frame-relay Internet Protocol (FRIP) and frame-relay address resolution protocol (FRARP) trace data is printed. Applicable to frame-relay physical trace data only.

SNA
Only FRTE-related trace data is printed.

Line trace summary report (LSPRT)

This report displays a summary of the Ethernet, frame-relay physical, IP, NCP, SIT, NTRI, or X.25 line trace data.

To produce this report a system sort program is required.

See “CHARCODE parameter” on page 34 for translation options.

```
►►─┬─ LSPRT=YES ─────────────────┬─►◄
   └─ LSPRT= ─┬─ NO ─┬──────────┘
              ├─ IP ─┤
              └─ SNA ─┘
```

YES
This is the default if a value is not specified or the parameters are reset. All data applicable to this report is printed.

NO
If this value is specified, the report is not processed.

IP
Only frame-relay Internet Protocol (FRIP) and frame-relay address resolution protocol (FRARP) trace data is printed.

SNA
Only FRTE-related trace data is printed.

LUNAME cross-reference report (LUPRT)

This report contains trace type, direction, FID, PLUNAME, SLUNAME, PCID, and timestamp information that ties network addresses together with logical unit names.

```
►►─┬─ LUPRT=NO ──┬─►◄
   └─ LUPRT=YES ─┘
```

NO
This is the default if a value is not specified or the parameters are reset. If this value is specified, the report is not processed.

YES
If specified, data is gathered from a bind PIU. If no bind PIUs are found in the trace data set, this report is not produced.

Network data traffic report (DTPRT)

This report provides a hexadecimal format and character printout of request/response units (RU) that have data associated with them. Any data that remains after the analysis of the transmission header (TH), request/response (RH) and RU command bytes, is printed.

This report is not generated for the character-mode line trace.

See “CHARCODE parameter” on page 34 for translation options.

```
►►─┬─ DTPRT=YES ─┬─►◄
   └─ DTPRT=NO ──┘
```

YES
All data applicable to this report is printed.

NO
This is the default if a value is not specified or the parameters are reset. If this value is specified, the report is processed.

Network error report (NEPRT)

This report lists the error messages and a one line summary (such as incorrect commands, sense codes, or BIND failures) of error conditions that have occurred in the network.

```
►►─┬─ NEPRT=YES ─┬─►◄
   └─ NEPRT=NO ──┘
```

YES
All data applicable to this report is printed.

NO
This is the default if a value is not specified or the parameters are reset. If this value is specified, the report is not processed. See "Network error report" on page 212 for a description and sample of the report.

SNA detail report (SDPRT)

This report provides an analysis of the SNA and SDLC message protocols and, depending on the trace data, includes the following information:

- Request/response header (RH)
- Request/response unit (RU) data
- SDLC command (SDLC CMD)
- Transmission header (TH)

This report is not generated for the character-mode line trace.

See "CHARCODE parameter" on page 34 for translation options.

```
►►─┬─────────── SDPRT=NO ──────────┬─►◄
   │                               │
   └─ SDPRT= ─┬─ YES ─┬──────────┘
              └─ ALT ─┘
```

NO
This is the default if a value is not specified or the parameters are reset. If this value is specified, the report is not processed.

YES
All data applicable to this report is printed.

ALT
If this value is specified when processing VTAM Buffer trace data or NCP line trace data, the alternate report format is used. See "SNA detail report (SDPRT)" on page 27 for a description and sample of the report.

SNA summary report (SSPRT)

This report provides a summary of the SNA and SDLC protocols in a compact one-print- line-per-message format, with the exception of a FID4 PIU which has two lines. The information is shown in a vertical column format which makes it easier to scan the report for bit setting changes.

When ALT is coded, the format is two print lines per message and the FID4 has three print lines.

This report is not generated for the character-mode line trace.

```
SSPRT=YES
SSPRT= NO
       ALT
```

YES
All data applicable to this report is printed.

NO
This is the default if a value is not specified or the parameters are reset. If this value is specified, the report is not processed.

ALT
If this value is specified when processing VTAM Buffer trace data or NCP line trace data, the alternate report format is used. See "SNA detail report (SDPRT)" on page 27 for a description and sample of the report.

Summary report parameters (SYSPRINT/SYSLST)

The SYSPRINT report provides a summary of the input records and a summary of the ACF/TAP parameters that are used in processing the trace data files. The SUMMARY, DUMP, and PRINT parameters are used to define the format of the SYSPRINT report.

For a description and examples of these reports, see "SYSPRINT reports" on page 231.

See "CHARCODE parameter" on page 34 for translation options.

Summary parameter

This parameter causes the trace record summary to be generated.

```
SUMMARY=YES
SUMMARY= ALL
         EVERY
         NO
```

Note: The SUMMARY parameter defaults to ALL if INPUT=SCAN and SUMMARY=YES, NO or ALL. The SUMMARY parameter is not overridden if you specify SUMMARY=EVERY.

YES
This is the default unless INPUT=SCAN. Input trace records processed by ACF/TAP are summarized. When trace records are selectively processed according to time, count, or nodename options, SUMMARY=ALL might produce more summary entries than SUMMARY=YES.

ALL
Specify this value to generate a summary of all processed and unprocessed trace records specified on the INPUT parameter. System control records are not summarized.

EVERY
Specify this value to cause ACF/TAP to summarize every trace record in the input data set, including system control records and record types that ACF/TAP does not process. Values specified on the INPUT parameter are disregarded.

NO
If this value is specified, summary data is omitted from the SYSPRINT report.

DUMP parameter

This parameter specifies whether dump data should be produced for the trace data file records.

```
►►─┬─ DUMP=NO ─┬──────────────────────────────────────►◄
   │           │
   └─ DUMP=YES ─┘
```

NO
This is the default value if a value is not specified or the parameter is reset. Dump data is omitted from the SYSPRINT or SYSLST reports.

YES
If this value is specified, dump data that ACF/TAP processed is summarized. The output produced is dependent on the SUMMARY parameter value.

- If SUMMARY=ALL, all processed records are dumped based on input type.
- If SUMMARY=EVERY, all records in the trace file are dumped.
- If SUMMARY=NO or SUMMARY=YES, all selectively processed records are dumped based on input type, time, count, and node.

To view trace data that has been truncated on other trace reports, code DUMP=YES. When DUMP=YES is coded, the entire buffer trace record appears on the SYSPRINT report.

PRINT parameter

This parameter specifies whether the contents of the transmission header, request header, and request/response unit should be printed.

NCP V6R2 and later:
PRINT is not a valid option for CSS resources.

NCP V7R1 and later:
PRINT is not a valid option for NTRI resources.

```
►►─┬─────────── PRINT=YES ──────────────┬──────────────►◄
   │                                    │
   └─ PRINT= ─┬─ NO ─┬──────────────────┘
              └─ ALT ─┘
```

YES
This is the default if a value is not specified or the parameter is reset. Transmission header, request header, and request or response unit data is printed in the SYSPRINT report.

NO
If this value is specified, transmission header, request header, and request or response unit data is omitted from the SYSPRINT/SYSLST report.

ALT
If this value is specified when processing VTAM Buffer trace data or NCP line trace data, the alternate report format is used. See "SYSPRINT reports" on page 231 for a description and sample of the report.

VTAM internal trace report (VTPRT)

This report shows the VTAM internal trace (VIT) elements. Each line contains a timestamp, the 32-byte trace element in hexadecimal format and character format.

```
►►─┬─ VTPRT=YES ─┬──────────────────────────────────────►◄
   │             │
   └─ VTPRT=NO ─┘
```

YES
All data applicable to this report is printed.

NO
This is the default if a value is not specified or the parameters are reset. If this value is specified, the report is not processed.

X.25 line trace report (NPPRT)

This report describes the X.25 line trace elements. Each line contains direction, logical channel number (LCN), timestamp and a detailed analysis of the frame and packet headers.

```
►►─┬─ NPPRT=NO ──┬─►◄
   └─ NPPRT=YES ─┘
```

NO
This is the default if a value is not specified or the parameters are reset. If this value is specified, the report is not processed.

YES
All data applicable to this report is printed.

ACF/TAP control parameters

Table 5 on page 30 describes the parameters that you can use to tailor your output reports for specific trace data. The table contains a short description of each control parameter and the location of detailed information.

Table 5. ACF/TAP Control parameter functions

Parameters	Function	See
3746 M900	Select specific 3746 Model 900 trace records for the CSS adapter or CSS line trace reports.	"3746 Model 900 parameters" on page 31
CHARCODE	Select EBCDIC or ASCII data translation for any report that translates hex data.	"CHARCODE parameter" on page 34
CSATYPE	Select type of trace records for the CSS adapter trace report.	"CSATYPE parameter" on page 35
DLCI	Select frame-relay trace data by logical connections.	"DLCI parameter" on page 40
INDEX (see note at end of table)	Select PIUs for the GPT index report.	"INDEX parameter" on page 41
INPUT (see note at end of table)	Specify the type of trace records to be analyzed.	"INPUT parameter" on page 41
LCN	Select NPSI, XI, and PVI elements for the X.25 line trace report.	"LCN parameter" on page 43
LINECNT	Specify the number of lines per page on the output reports.	"LINECNT parameter" on page 43
LLN	Select logical line numbers for the NTRI line traces and hardware addresses for ESS line traces.	"LLN parameter" on page 43
LOGADDR	Select logical line addresses for the CSS line trace report.	"LOGADDR parameter" on page 44

Table 5. ACF/TAP Control parameter functions (continued)		
Parameters	**Function**	**See**
LONGPIU	Expand the formatted length of line trace data or VTAM full | buffer trace data.	“LONGPIU parameter” on page 44
NCPNAME	Select GPT records by NCP name.	“NCPNAME parameter” on page 45
Node	Select records by device name.	“NODE parameter” on page 46
RRSUP	Control suppression of receive ready frames.	“RRSUP parameter” on page 48
S/EDATE S/ETIME	Select records by date or time.	“S/EDATE and S/ETIME parameters” on page 49
SOURCE	Specify the origin of the trace files.	“SOURCE parameter” on page 51
START/END	Select records by count (range).	“START and END parameters” on page 51
TIMEOUT	Specify the timeout limit for NCP line trace timer field.	“TIMEOUT parameter” on page 52
TOSUP	Control suppression of the printing of timeout messages for frame relay.	“TOSUP parameter” on page 52
VIEW	Specify online or print mode to view SNA detail, SNA summary or SYSPRINT reports.	“VIEW parameter” on page 53
VIT	Select VTAM internal trace (VIT) entries.	“VIT parameters” on page 53
WRAP	Select GTF data sets (used with SDATE/STIME parameters).	“WRAP parameter” on page 54
Note: ACF/TAP supports GPT data with the INDEX, INPUT, and IXPRT parameters. For more information about GPT data, see “How ACF/TAP supports GPT data” on page 2 .		

3746 Model 900 parameters

These parameters are valid for the 3746 Model 900 only. They are used for processing specific CSS adapter type records for the CSS adapter trace report (CAPRT), and CSS line trace type records for the CSS line trace report (CSPRT).

When these parameters are used with the CSATYPE parameter, the following occurs.

If the value on the CSATYPE parameter and the 3746 Model 900 parameters match, the trace data specified by the 3746 Model 900 parameter is displayed on the report. For example:

```
CSATYPE=TRA
TRALMAC=xxxxxxxxxxxx
```

Only TRA-CPLR and TRA-LSA trace elements are displayed. No other TRA keys are displayed.

If the trace data set contains various types of data (MAPR, TRA, ESCON, CLA) and the parameters are coded:

```
CSATYPE=CBA
TRALMAC=xxxxxxxxxxxx
NCPLRID=xxxxxxxx
```

No data appears on the report because none of the 3746 Model 900 parameters matched the CSATYPE parameter value.

See the parameter description to determine what trace data is processed for each parameter.

If none of these parameters are selected, the records processed defaults to the values selected with the CSATYPE parameter.

When coding multiple parameters, they must be separated with a blank space or a comma.

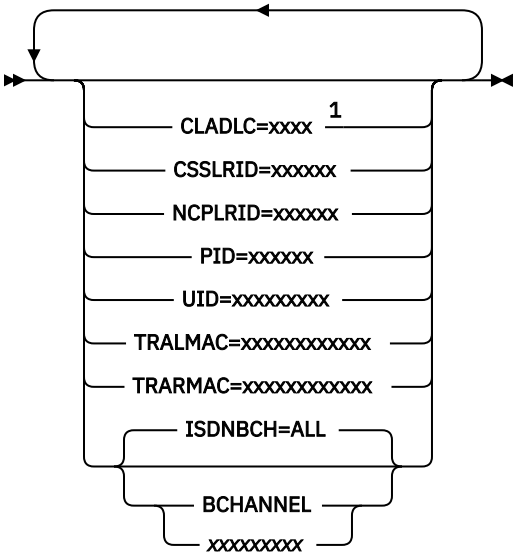

Notes:

[1] Depending on the frame type, the CLADLC address can be 1 or 2 bytes long.

Parameter descriptions

The record types listed under the parameter description are the trace data that is produced when the parameter is used.

CLADLC
Communications line adapter DLC address.

CLA-PIU
Inbound and outbound PIU at IFA level

CSSLRID
CSS local resource ID.

MAPR-LSA
LSA primitives

MAPR-SSA
SSA primitives

LDPSA
LIM to dynamic NCP PSA (CSPRT and CAPRT reports)

NDPSA
NCP to dynamic LIM PSA (CSPRT and CAPRT reports)

NCPLRID
NCP local resource ID.

MAPR-LSA
LSA primitives

MAPR-MSG
CDIM messages

MAPR-SSA
SSA primitives

LDPSA
LIM to dynamic NCP PSA (CSPRT and CAPRT reports)

NDPSA
NCP to dynamic LIM PSA (CSPRT and CAPRT reports)

PID
Provider connection endpoint identifier.

CLA-LSA
Incoming and outbound LSA DL/PM primitive

TRA-LSA
DL_LSA primitives traced in the enabler and sent from the enabler to LLC, and from the LLC to the enabler.

DL_LSA primitives exchanged from a LSA user to the LLC sublayer, and from a LSA sublayer to a LSA user.

MAC_LSA primitives exchanged with MAC sublayer.

UID
User connection endpoint identifier.

CLA-LSA
Incoming and outbound LSA DL/PM primitive

TRA-LSA
DL_LSA primitives traced in the enabler and sent from the enabler to LLC, and from the LLC to the enabler.

DL_LSA primitives exchanged from a LSA user to the LLC sublayer, and from a LSA sublayer to a LSA user.

MAC_LSA primitives exchanged with MAC sublayer.

TRALMAC
Token-ring receive and transmit frames.

TRA-CPLR
Token-ring receive and transmit frames.

TRA-LSA
DL_LSA primitives traced in the enabler and sent from the enabler to LLC, and from the LLC to the enabler.

DL_LSA primitives exchanged from a LSA user to the LLC sublayer, and from a LSA sublayer to a LSA user.

MAC_LSA primitives exchanged with MAC sublayer.

TRARMAC
Remote MAC address.

TRA-CPLR
Token-ring receive and transmit frames.

TRA-LSA

DL_LSA primitives that are traced in the enabler and sent from the enabler to LLC, and from the LLC to the enabler.

DL_LSA primitives that are exchanged from a LSA user to the LLC sublayer, and from a LSA sublayer to a LSA user.

MAC_LSA primitives that are exchanged with MAC sublayer.

ISDNBCH

This parameter applies to the CSPRT report.

This parameter applies to the processing of ISDN line trace data. When line trace is run for an ISDN physical line, ISDNBCH can be used to select only the data for a specific B-channel.

```
►► ┌─ ISDNBCH=ALL ──────────────┐ ►◄
   │                            │
   └─ ISDNBCH= ─┬─ BCHANNEL ─┬─┘
                └─ xxxxxxxx ─┘
```

B-channel resource

The following options are for B-channel resources.

ALL

The default value if a value is not specified or the parameter is reset. All data is displayed.

BCHANNEL

Selects all ISDN B-channel data.

xxxxxxxx

Specifies the line name (in hexadecimal format) of the B-channel whose data is to be displayed.

CHARCODE parameter

Use this parameter to select EBCDIC or ASCII data translation for the following reports:

- CSS adapter or CSS line trace
- Line trace detail, line trace summary
- Frame-relay logical line trace summary
- Network data traffic
- SNA detail SYSPRINT
- VTAM internal trace

ACF/TAP translates the hex data using the EBCDIC or ASCII translate tables. However, the actual translated data depends on how the trace data was initially built. For example, if data was built in ASCII, and the EBCDIC value is used on the CHARCODE parameter, the translated data is unreadable.

```
►► ┌─ CHARCODE=EBCDIC ─┐ ►◄
   │                   │
   └─ CHARCODE=ASCII ─┘
```

EBCDIC

This is the default if a value is not specified or the parameter is reset. If this value is specified, hex data is translated to an EBCDIC format.

ASCII

If this value is specified, hex data is translated to an ASCII format.

CSATYPE parameter

Use this parameter to select the CSS adapter type records you want processed for the CSS adapter trace report (CAPRT).

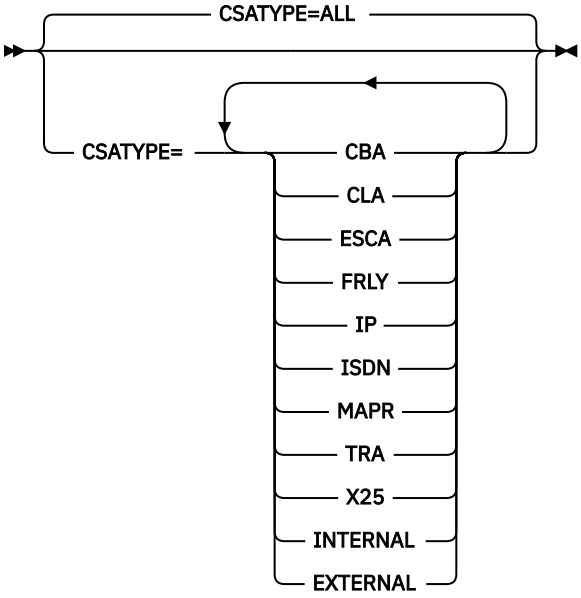

Notes:

1. See the value descriptions to determine what trace data is processed for the value you specified. If you want to process a specific CSA trace record type only, for example CBA-CHK, enter that value on the parameter.
2. Multiple values can be specified on the CSATYPE parameter but they must be separated by a blank space or comma (,). For example, code the following:

   ```
   csatype=cba-chk cba-cplr cla-chk
   ```

   or

   ```
   csatype=cba,cla,esca
   ```

Restriction: A maximum of 72 characters can be entered on the input line.

ALL
This is the default if a value is not specified or the parameter is reset. All CSA trace record types in the trace data set are processed with one run of ACF/TAP.

CBA
Controller bus adapter. The following data is processed:

- Internal Data:

  CBA-CHK
  Checkpoint

  CBA-PROC
  Processor

- External data:

  CBA-CPLR
  Coupler

CLA
Communications line adapter. All the following data is processed:

- Internal data:

ESCA-CBP
Controller bus processor

ESCA-CBC
Controller bus coupler

ESCA-CCHK
Coupler checkpoint

ESCA-DATA
Messages

ESCA-DPSA
DPSA messages

ESCA-PCHK
Processor checkpoint

- External data:

ESCA-CPLR
Coupler

ESCA-PIU
Path information unit

FRLY
Frame relay. All the following CSS and frame relay (FRLY) data is processed.

- Internal data:

CSS-CBC
Controller bus coupler

CSS-CBP
Controller bus processor

CSS-CDIM
CDIM messages

CSS-CHK
Checkpoint

CSS-CSS
Connectivity subsystem

CSS-LSA
LSA primitives

CSS-MSG
Messages

CSS-SSA
SSA primitives

- External data:

FRLY-FRFH
Frame-relay frame handler

FRLY-FRTE
Frame-relay terminal equipment

FRLY-HPR
High performance routing

FRLY-IP
Internet Protocol

FRLY-LMI
Local management interface

IP
Internet Protocol. All the following data is processed.

- External data:

  IP-RECV
  IP receive data

  IP-XMIT
  IP transmit data

ISDN
Integrated services digital network. All the following data is processed.

- Internal data:

  CSS-CBC
  Controller bus coupler

  CSS-CBP
  Controller bus processor

  CSS-CDIM
  CDIM messages

  CSS-CHK
  Checkpoint

  CSS-CSS
  Connectivity subsystem

  CSS-LSA
  LSA primitives

  CSS-MSG
  Messages

  CSS-SSA
  SSA primitives

  ISDN-CHK
  Checkpoint

- External data:

  ISDN-LIC
  Line interface coupler

  ISDN-RECV
  ISDN Receive data

  ISDN-XMIT
  ISDN Transmit data

MAPR
Mapper. All the following common and specific mapper data is processed.

- Internal data:

  MAPR-CBC
  Controller bus coupler

  MAPR-CBP
  Controller bus processor

  MAPR-CDIM
  CDIM messages

  MAPR-LSA
  LSA primitives

  MAPR-SSA
  SSA primitives

TRA
Token ring adapter. All the following data is processed.

- Internal data:

  TRA-CDIM
  CDIM messages

  TRA-LSA
  LSA primitives

  TRA-PSSA
  SSA primitives

- External data:

  TRA-CPLR
  Coupler

X25
X.25 adapter. All the following data is processed.

- Internal data:

  CSS-CBC
  Controller bus coupler

  CSS-CBP
  Controller bus processor

  CSS-CDIM
  CDIM messages

  CSS-CHK
  Checkpoint

  CSS-CSS
  Connectivity subsystem

  CSS-LSA
  LSA primitives

  CSS-MSG
  Messages

  CSS-SSA
  SSA primitives

- External data:

  X25-RECV
  X.25 Receive data

  X25-XMIT
  X.25 Transmit data

INTERNAL
If this operand is specified, the following data is processed:

CBA-CHK
Checkpoint

CBA-PROC
Processor

CLA-CHK
Checkpoint

CLA-LSA
LSA primitives

ESCA-CBP
Controller bus processor

ESCA-CBC
Controller bus coupler

ESCA-CCHK
Coupler checkpoint

ESCA-DATA
Messages

ESCA-DPSA
DPSA messages

ESCA-PCHK
Processor checkpoint

CSS-CBC
Controller bus coupler

CSS-CBP
Controller bus processor

CSS-CDIM
CDIM messages

CSS-CHK
Checkpoint

CSS-CSS
Connectivity subsystem

CSS-LSA
LSA primitives

CSS-MSG
Messages

CSS-SSA
SSA primitives

ISDN-CHK
Checkpoint

MAPR-CBC
Controller bus coupler

MAPR-CBP
Controller bus processor

MAPR-CDIM
CDIM messages

MAPR-LSA
LSA primitives

MAPR-SSA
SSA primitives

TRA-LSA
LSA primitives

TRA-PSSA
SSA primitives

EXTERNAL
If this value is specified, the following data is processed:

CBA-CPLR
Coupler

CLA-MAC
MAC modem

CLA-PIU
Path information unit

ESCA-CPLR
Coupler

ESCA-PIU
Path information unit

FRLY-FRFH
Frame-relay frame handler

FRLY-FRTE
Frame-relay terminal equipment

FRLY-HPR
High performance routing

FRLY-LMI
Local management interface

IP-RECV
IP receive data

IP-XMIT
IP transmit data

SDN-LICI
Line interface coupler

ISDN-RECV ISDN
Receive data

ISDN-XMIT
ISDN Transmit data

TRA-CPLR
Coupler

X25-RECV
X.25 Receive data

X25-XMIT
X.25 Transmit data

DLCI parameter

This parameter controls the selection of frame-relay trace data based on the data link connection identifier (DLCI) assigned to the frame-relay switch by the network provider. A single, list, or range of connection identifiers can be specified or all frame-relay trace data can be selected for processing. This parameter does not affect the line trace detail report (LDPRT). DLCI does not apply to a 3746 Model 900 frame-relay connection.

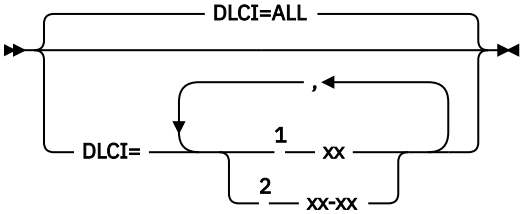

Notes:

[1] In hexadecimal format.
[2] In hexadecimal format.

ALL
This is the default if a value is not specified or the parameter is reset. All frame-relay trace data is selected.

xx-xx
Specifies the DLCI of the frame-relay data to be selected. The DLCI parameter, entered in hexadecimal format, maps to the ADDR keyword on the PU definition statement. You can specify 1 - 5 logical connections (separated by commas), or a range of DLCIs (separated by a dash). If a range of DLCIs is specified, the DLCIs specified and all logical connection identifiers that fall between them are selected.

INDEX parameter

This parameter controls the selection of the PIUs to be formatted. When the INDEX parameter is specified, GPTNORE parameter (GPT trace data) selection processing is bypassed for GPT records. See "GPTNODE parameter (GPT trace data)" on page 47 for more information. A maximum of 20 index parameters can be selected. For more information about selecting PIUs for the GPT index report see "How ACF/TAP supports GPT data" on page 2.

```
►► INDEX= ──┬─ Anetaddr1,netaddr2 ──┬──►◄
            ├─ Bnetaddr1,netaddr2,nnnnnnn ─┤
            └─ Innnnnnn ──────────┘
```

A*netaddr1,netaddr2*
Specify a pair of network addresses between which PIUs are to be formatted. ACF/TAP selects all GPT elements with this address pair. The network address formats are *ssssssssseeee*, where *ssssssss* is the subarea address, and *eeee* is the element address.

B*netaddr1,netaddr2,nnnnnnn*
Specify a pair of network addresses between which PIUs are to be formatted beginning at a particular GPT record number. ACF/TAP begins processing using the selected record number and continues until the end of the file is reached. The starting record number is *nnnnnnn*, and *netaddr1,netaddr2* is the address pair to be formatted. The record number (*nnnnnnn*) can be from 1 - 7 digits in length and does not need to be padded with zeros.

I*nnnnnnn*
Specify a starting index number obtained from the GPT index report. It can be 1 - 7 digits in length and does not need to be padded with zeros. This option shows the conversation starting at the selected index number and continues to show the associated GPT entries until one of the following occurs:

- Another FMH5 is encountered for the selected address pair (the start of another conversation).
- A BIND is encountered for the selected address pair. The original session has ended, and a new session is being initiated.
- A new status record for a dummy BIND for the selected address pair is encountered. The original session has ended, and a new session is initiated.

INPUT parameter

Use the INPUT parameter to specify the input file trace data that you want to be processed.

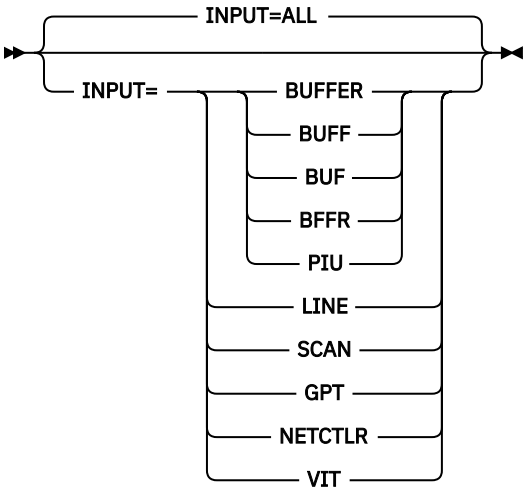

ALL
This is the default if a value is not specified or the parameter is reset. All trace records types in the trace data set are processed with one run of ACF/TAP.

BUFFER, BUFF, BUF, BFFR, PIU
Specify this value to process a VTAM buffer trace. Any of the abbreviations listed here can be used.

LINE
Specifying this value causes the following trace records to be processed:

- NCP line
- SIT
- Transmission group
- NTO internal and FIDO
- NRF
- NTRI
- TIC
- X.25
- Frame-relay
- ESS trace
- CSS line and adapter traces

The NTRI line trace includes the NTRI IOH trace. When you activate an NTRI line trace, the IOH trace is automatically activated.

SCAN
Specify this value if you want only summary data to be collected for all trace records in the trace data set. Analysis is not done on the trace records, and only a SYSPRINT report is produced. If INPUT=SCAN, the SUMMARY parameter is set to ALL, unless you specify SUMMARY=EVERY.

For more SUMMARY parameter information, see “Summary parameter” on page 28. For information about messages DSJ201I and DSJ205I, see Appendix A, “Messages,” on page 57.

GPT
Specify this value to process the generalized PIU trace (GPT) records. If you specify this value, see the NCPNAME parameter in “NCPNAME parameter” on page 45.

NETCTLR
Specify this value to process the network controller trace for the IBM 3710 Network Controller.

VIT
Specify this value to process the VTAM internal trace (VIT).

LCN parameter

Use the logical channel numbers (LCN) parameter to select the NPSI, XI, and PVI elements for the X.25 line trace report.

Use the LINENODE parameter to select physical lines by specifying their names. If you do not specify LINENODE, ACF/TAP tests the NODE parameter. For more information, see “NODE parameter” on page 46.

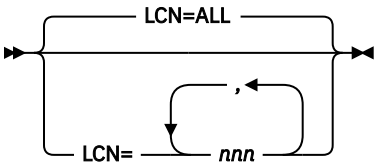

ALL
This is the default if a value is not specified or the parameter is reset. All the logical channel numbers (LCNs) in the trace data are selected in the sequence encountered. Use this value to select supervisory and unnumbered frames.

nnn
Specify this value to determine the 3-digit logical channel addresses that are shown in the line trace report, sorted by LCN. Up to 10 logical channel addresses can be specified. However, system performance degrades with each additional logical channel address specified.

LINECNT parameter

Use the LINECNT parameter to specify the number of lines per page for the output reports.

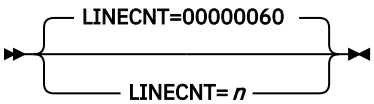

00000060
This is the default lines per page if a value is not specified or the parameter is reset.

n
Specify the number of lines per page on the output reports. The minimum number of lines allowed is 25, and the maximum number of lines allowed is 99,999,999.

LLN parameter

Use the LLN parameter to select the logical line numbers for NTRI line traces and hardware addresses for ESS line traces.

ALL
This is the default if a value is not specified or the parameter is reset. All NTRI logical line numbers and ESS hardware addresses in the trace data are selected.

aaaaaaaaaaaa:bb
Use this value to specify which logical line number is selected.

aaaaaaaaaaaa
This value specifies the destination or source address of the NTRI line to be selected or the ESS hardware address (locally administered or universal) of the data to be traced. The address is a hexadecimal number in the range X'000000000000' - X'7FFFFFFFFFFE'.

bb

This value specifies the system access point, the destination system address point (DSAP), or the source system address point (SSAP) of the logical line to be selected. When traces for multiple logical lines appear in the trace data set, you can select one for formatting by specifying the DA/DSAP or SA/SSAP pair. If either the destination address and DSAP pair or the source address and SSAP pair matches the logical line address specified, the element is formatted.

Tips:

- Specify two asterisks (**) for the DSAP or SSAP to show all entries for a particular source or destination address.
- Use two asterisks in place of the service access point (SAP) for ESS data other than 802.3 snap encapsulated data because there are no SAPs.

LOGADDR parameter

This parameter controls the selection of logical line addresses for the CSS line trace report (CSPRT).

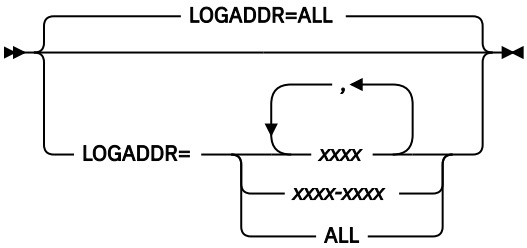

ALL

This is the default if no value is specified or the parameter is reset. If you specify this value, all logical line addresses are processed.

xxxx, xxxx-xxxx

Specify 1 - 15 logical line addresses (separated by commas) or a range of logical line addresses (separated by a dash).

If either LINENODE or NODE is specified, LOGADDR further qualifies the selection criteria for the detail level report. Use the LINENODE parameter to select physical lines by specifying their names. If LINENODE is not specified, ACF/TAP tests the NODE parameter.

ACF/TAP does not use the LOGADDR parameter when it generates the SYSPRINT level report.

LONGPIU parameter

This parameter controls the number of bytes that ACF/TAP uses to format line trace data or VTAM full buffer trace data.

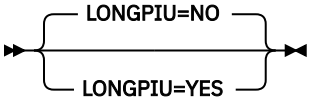

NO

This is the default if a value is not specified or the parameter is reset. The length of the trace data is set to a maximum of 252 bytes.

YES

If you specify this value when formatting normal-mode line trace data, ACF/TAP can format up to 4092 bytes of data on the following reports:

- Line trace detail
- SNA detail

- Network data traffic
- Frame-relay logical line trace summary
- SYSPRINT

If you specify this value when formatting VTAM full buffer trace data, ACF/TAP can format up to 4096 bytes of data on the SNA detail, network data traffic, and SYSPRINT reports.

NCPNAME parameter

Use the NCPNAME parameter to specify the name of the NCP for which ACF/TAP is to format GPT records and is valid only when INPUT=GPT is specified.

```
►►─ NCPNAME= nnnnnnnnnnnn ─►◄
```

nnnnnnnnnnnn
Specify the name of the NCP for which ACF/TAP formats the GPT trace records. The name can be 1 - 12 characters in length, and the default is the first name found.

Node parameters

Use the node parameters to select the following node parameters to process selected records based on the device name or network address:

- NODE
- BFFRNODE
- CTLRNODE
- GPTNODE
- LINENODE

ACF/TAP checks each specific node parameter, except GPTNODE, for the trace data records to be selected. If you do not specify selection values on the parameter, ACF/TAP uses the information specified on the NODE parameter. If you provide no selection criteria on the NODE parameter, the default value (ALL) is used.

If you do not specify the same selection criteria on the NODE parameter and a specific node parameter (for example LINENODE), the selection criteria on the NODE parameter is ignored.

For GPT processing, if you do not specify GPTNODE, node processing uses the first nonzero link address and not the value of the NODE parameter.

Notes for node parameters

- You can specify several different nodes in your selection criteria.
- Processing records based on device name or network address is recommended when preparing complex trace reports.
- If you are using VTAM network-qualified names buffer trace data, the GTF file can contain data from more than one VTAM application. You can request trace data from a selected network by specifying the qualifier for that network on either the NODE or BFFRNODE parameter.
- The device addresses for which trace records are processed are the output from the configuration report program (CRP). See *NCP, SSP, and EP Diagnosis Guide*, LY43-0033 for more information about the CRP.
- The node parameters are not valid for VIT; ACF/TAP ignores any value supplied.
- All node selection processing is bypassed under the following circumstances:
  - IXPRT=YES
  - An INDEX parameter has been specified, and a GPT record is being processed.

- During node processing, ACF/TAP processes the START and END parameters using a count value. ACF/TAP processes the node parameters while processing the STIME and ETIME parameters. Therefore, it is possible to select *n* records from a particular node occurring between certain time limits.

NODE parameter

Use the node parameter in place of any other node parameter, except GPTNODE.

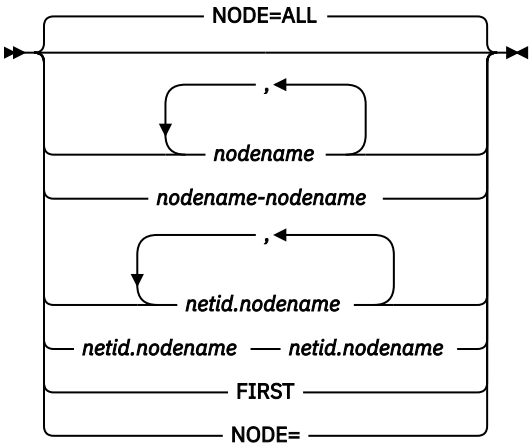

ALL
This is the default if a value is not specified or the parameter is reset. All trace records for the trace data type specified are selected.

nodename
This value selects the device name or network address. You can specify 1 - 15 individual device names or network addresses (*nnn,nnn,nnn*) or a range of device names or network addresses (*nnn-nnn*). If a range of devices or addresses is used, all devices or addresses that fall between, and including, the specified names are selected.

The *nodename* you specify depends on the type of trace used. Table 6 on page 46 shows the trace type and the corresponding node name.

Table 6. Trace types and corresponding node names

Trace	Node name
VTAM buffer trace	Alphanumeric origin name
Line trace	Alphanumeric line name
3710 control unit	Alphanumeric control unit name
IO, GPT	Alphanumeric origin address field

netid.nodename
Specify this value to cause trace records for the specified network to be selected when a GTF file contains trace data from more than one VTAM application.

netid
Specify the ID of the network to be selected. Use an asterisk (*) to include all networks, or you can omit this value.

nodename
Specify the node name of the origin node being traced. Use an asterisk (*) to include all node names. Code NODE=*nodename* to select the origin node name without specifying a qualifier.

This format is used for network qualified names buffer trace data.

FIRST
If you specify this value, the first node found in the trace data set is selected. Table 7 on page 47 shows supported trace types and the selected nodes.

Table 7. Supported trace types and selected nodes

Line trace	First line name found
Network controller trace	First control unit name found.
VTAM buffer trace	First origin node name.

BFFRNODE parameter (buffer trace data)

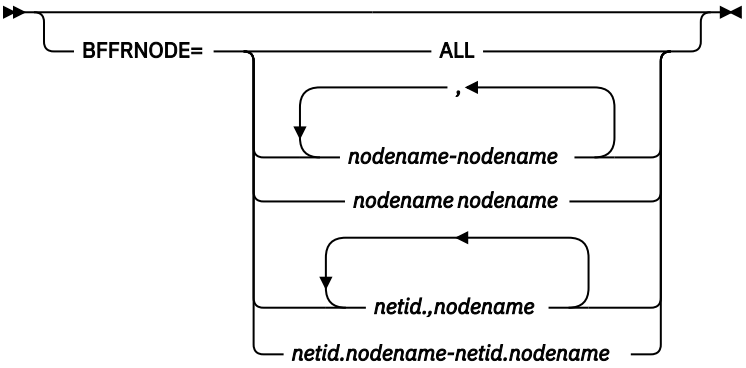

ALL
Set this value to process all trace records for the specific trace data type.

nodename netid.nodename
For a description of these values, see *nodename* and *netid.nodename* in "NODE parameter" on page 46.

CTLRNODE parameter (NETCTLR trace data)

This parameter causes the network controller trace for the IBM 3710 Network Controller to be processed.

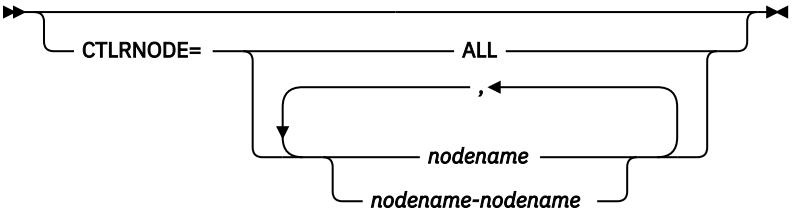

ALL
Specify this value to process all trace records for the specific trace data type.

nodename
For a description of this value, see *nodename* in "NODE parameter" on page 46.

GPTNODE parameter (GPT trace data)

When the INDEX parameter (see "INDEX parameter" on page 41) is specified, GPTNODE selection values are ignored.

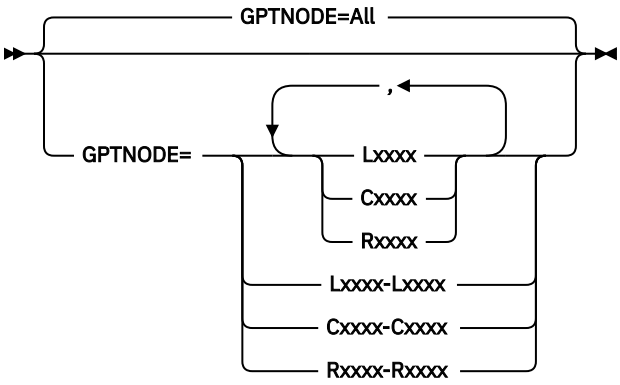

ALL
This is the default if a value is not specified or the parameter is reset. All trace records are processed.

Lxxxx
Cxxxx
Rxxxx
Specifies the device type and device address to be selected from the GPT data. The unique 4-character device address is preceded by an L (link), C (cluster), or R (resource), that identifies the device type. You can specify a list of 1 - 15 device type and address combinations (separated by commas).

You can specify 1 - 15 address hierarchies. However, specify only the highest element in the hierarchy for which you request trace data. For example, if you need to format trace data from the logical units with addresses of R0001 and R0002 attached to a cluster controller with an address of C0001, a node name of C0001 causes a hierarchy of information to be supplied for C0001, R0001, and R0002. You can also select a range of devices. Trace data from all devices with names that fall within the specified range are processed.

LINENODE parameter (line trace data)

Use the LINENODE parameter to select physical lines by specifying their names. If LINENODE is not specified, ACF/TAP tests the NODE parameter.

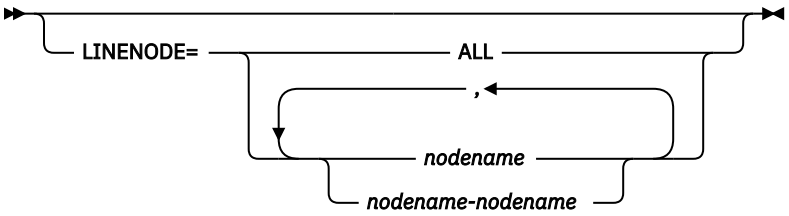

ALL
All trace records for the specific trace data type are processed.

nodename
For a description of this value, see *nodename* in "NODE parameter" on page 46.

You can select multiple line names for the line trace. If you do not specify a line name, all identifiable names in the input file are used as a selection criteria for the remainder of the file. When selecting multiple lines, select lines of the same scanner type; otherwise, the output can be unpredictable.

RRSUP parameter

Use the RRSUP parameter to control the suppression of receive ready (RR) and receive not ready (RNR) frames. The line trace detail report (LDPRT) is not affected except when RRSUP=YES and scanner data is type 3.

```
►►─┬─ RRSUP=YES ──────────────────┬─►◄
   │                              │
   └─ RRSUP= ─┬─ NO ──┬──────────┘
              └─ PAIR ─┘
```

YES
This is the default if a value is not specified or the parameter is reset. RR frames are suppressed.

NO
This value allows RR frames to be shown on the trace output report.

PAIR
This setting suppresses specific RR sequence pairs (command and response) occurring after the first pair in some output reports. This does not affect the SNA summary and detail reports (SSPRT and SDPRT) for type 1 and type 2 scanners or the normal-mode line trace data. Because of NCP processing for the line trace for duplex lines, RRSUP=PAIR does not suppress duplex line trace data.

S/EDATE and S/ETIME parameters

Use the S/EDATE and S/ETIME parameters to select trace records based on their date and time.

For more information, see "WRAP parameter" on page 54 when selecting GTF data sets, and see "VIT parameters" on page 53 when selecting VTAM internal trace (VIT) records.

If S/EDATE and S/ETIME values are not specified, record date and time stamps are ignored and the entire file is processed.

If SDATE and EDATE are not used, but STIME and ETIME are used, ETIME minus STIME must be less than 24 hours. The ETIME parameter might not be accurate when the input trace data contains VIT and at least one other type of trace data because the time stamps are not always sequential.

```
►►─┬─────────────────────────────────────────┬─►◄
   │                                         │
   │  ┌──────────────────────────────────────┘
   │  │
   ├─ SDATE= mm.dd.yyyy ──────────────────────┤
   │                                         │
   ├─ EDATE= mm.dd.yyyy ──────────────────────┤
   │                                         │
   ├─ STIME= hh.mm.ss ─┬──────────────────────┤
   │                   └─ .dddddd ────────────┤
   │                                         │
   └─ ETIME= hh.mm.ss ─┬──────────────────────┘
                       └─ .dddddd ────────────
```

Notes:

- SDATE is the start date.
- EDATE is the end date.
- STIME is the start time.
- ETIME is the end time.

mm.dd.yyyy
This value specifies the date as month (*mm*), day (*dd*), and year (*yyyy*). If you specify a 2-digit year, it is converted to a 4-digit year.

hh.mm.ss.dddddd
Specify the time in hours (*hh*), minutes (*mm*), and seconds (*ss*). If necessary, you can also specify microseconds (*dddddd*).

Table 8 on page 50 shows different methods of using the date and time parameters to select trace data.

Table 8. Methods of using the date and time parameters to select trace data	
Specifying a parameter	**Values to use**
STIME	**SDATE** Processing starts with the first record having a date and time that matches or exceeds the SDATE and STIME values, and continues to end of file. **EDATE** SDATE is set to the date of the first record in the file. Processing starts with the first record having a date and time that matches or exceeds the SDATE and STIME values, and continues until a record date exceeds the EDATE value or until end of file. **SDATE and EDATE** Processing starts with the first record having a date and time that matches or exceeds the SDATE and STIME values, and continues until a record date exceeds the EDATE value or until end of file.
ETIME	**SDATE** EDATE set to the same date as SDATE. Processing starts with the first record having a date that matches or exceeds SDATE, and continues until a record date and time exceeds the EDATE and ETIME values or until end of file. **EDATE** SDATE set to the date of the first record. in the file. Processing starts with the first record having a date that matches or exceeds SDATE, and continues until a record date and time exceeds the EDATE and ETIME values or until end of file. **SDATE and EDATE** Processing starts with the first record having a date that matches or exceeds SDATE, and continues until a record date and time exceeds the EDATE and ETIME values or until end of file.
STIME and ETIME	**SDATE** EDATE set to the same date as SDATE. Processing starts with the first record having a date and time that matches or exceeds the SDATE and STIME values, and continues until a record date and time exceeds the EDATE and ETIME values or until end of file. **EDATE** SDATE set to the date of the first record in the file. Processing starts with the first record having a date and time that matches or exceeds the SDATE and STIME values, and continues until a record date and time exceeds the EDATE and ETIME values or until end of file. **SDATE and EDATE:** Processing starts with the first record having a date and time that matches or exceeds the SDATE and STIME values, and continues until a record date and time exceeds the EDATE and ETIME values or until end of file.

Table 9 on page 50 shows different methods of using the date and time parameters to select trace data without SDATE and EDATE.

Table 9. Methods of using the date and time parameters to select trace data without SDATE and EDATE	
Specifying a parameter	**Results without SDATE and EDATE**
STIME	SDATE set to the date of the first record in the file. Processing starts with the first record having a date and time that matches or exceeds the SDATE and STIME values, and continues until end of file.

Table 9. Methods of using the date and time parameters to select trace data without SDATE and EDATE (continued)	
Specifying a parameter	**Results without SDATE and EDATE**
ETIME	SDATE set to the date of the first record in the file. EDATE set to the same date as SDATE. Processing starts with the first record having a date value that matches or exceeds the SDATE value, and continues until a record date and time exceeds the EDATE and ETIME values or until end of file.
STIME and ETIME	SDATE set to the date of the first record in the file. EDATE set to the same date as SDATE. Processing starts with the first record having a date and time that matches or exceeds the SDATE and STIME values, and continues until a record date and time exceeds the EDATE and ETIME values or until end of file.

Table 10 on page 51 shows different methods of using the date and time parameters to select trace data without STIME and ETIME.

Table 10. Methods of using the date and time parameters to select trace data without STIME and ETIME	
Specifying a parameter	**Results without STIME and ETIME**
SDATE	Starts with the first record having a date value that matches or exceeds the SDATE value. Processes until end of file.
EDATE	Sets the value of SDATE to equal the date of the first record that can be processed. Starts with the first record having a date value that matches or exceeds the SDATE value. Processes until a record's date value exceeds the EDATE value.
SDATE and EDATE	Starts with the first record having a date value that matches or exceeds SDATE's value. Processes until the record date value exceeds the EDATE value.

SOURCE parameter

Use the Source parameter to indicate the format of the trace data source files. This value is dependent on the operating system and access method used.

VTAM produces the GTF SYS1.TRACE data set.

```
►►─┬─ SOURCE= ── F ──┬─►◄
   └─ SOURCE= ── APPN ─┘
```

F (GTF)
This is the default value if a value is not specified or the parameter is reset. Use this value if MVS trace data is in the MVS GTF format.

APPN
Specify this value to format 3746 Model 950 trace data.

The product is used with the MVS operating system using the VTAM access method and traces gathered by way of GTF.

START and END parameters

Use the START and END parameters to select records for processing based on ACF/TAP-assigned message counts.

For example:

```
►►─ START= count ─►◄
```

```
►► END=count ►◄
```

count
This value specifies the ACF/TAP-assigned message count where selection of trace records for processing should start or end.

You can also specify starting and ending counts when a trace file is scanned (INPUT=SCAN). If you specify INPUT=SCAN, analysis is not done on trace records. The count limits apply to the number of records scanned. If you specify SUMMARY=EVERY, the count limits apply to every trace record on the file. If you do not specify the SUMMARY parameter, the scan count applies only to trace records that ACF/TAP can process.

Restrictions:

- START and END are valid only for buffer traces.
- ACF/TAP processes only the records with message counts between those specified by START and END parameters.

TIMEOUT parameter

Use the TIMEOUT parameter to specify the duration of the NCP line trace timer fields that ACF/TAP flags as an exception in the line trace summary report (LSPRT) and in the line trace detail report (LDPRT).

The following is an example:

```
►► ┌─ TIMEOUT=010 ─┐ ►◄
   └─ TIMEOUT= nnn ─┘
```

010
This is the default NCP timer duration if a value is not specified or the parameter is reset.

nnn
Specify a value in the range 000 (minimum) - 255 (maximum). If you specify 000 or 001, ACF/TAP eliminates the timeout exception.

The times that you specify represents tenths of a second.

TOSUP parameter

Use the TOSUP parameter to suppress the printing of timeout messages generated by timeout conditions on any SDLC receive command. Instead of printing each message, ACF/TAP counts the number of messages and prints this count in the reports. Use this parameter primarily for frame-relay physical line trace data because of the numerous timeout messages generated in this environment and it affects the line trace summary report only.

The following is an example:

```
►► ┌─ TOSUP=YES ─┐ ►◄
   └─ TOSUP=NO ─┘
```

YES
This is the default if a value is not specified or the parameter is reset. The printing of timeout messages is suppressed for receive commands and only the number of messages received is reported.

NO
This value allows messages generated by timeout conditions to be shown in the trace output report.

VIEW parameter

Use the VIEW parameter to view online or obtain a printout of the SNA detail, SNA summary, and SYSPRINT reports.

The following is an example:

```
►►─┬─ VIEW=PRINT ──┬─►◄
   └─ VIEW=ONLINE ─┘
```

PRINT
This is the default if a value is not specified or the parameter is reset. If you specify this value, ACF/TAP formats the following reports for printing:

- SNA detail
- SNA summary
- SYSPRINT

ONLINE
If you specify this value, ACF/TAP formats the following reports for viewing at you online display:

- SNA detail
- SNA summary
- SYSPRINT

VIT parameters

Use the VIT parameters (with the STIME and ETIME parameters) to select specific VIT entries. When entering your selection, or selections, the following parameter hierarchy must be followed:

- STIME and ETIME
- VNAME
- VITTYPE
- VITSTR

See "WRAP parameter" on page 54 for a description of the time parameters.

VNAME parameter

Use the VNAME parameter to specify the VTAM job name or ASCB address selection.

The following is an example:

```
►►─┬──────────────────────────────┬─►◄
   └─ VNAME= ─┬─ nnnnnnnn ─┬─┘
              └─ aaaa ──────┘
```

nnnnnnnn
Specifies the name of the VTAM job for which records are to be processed. The value of VNAME is compared against the job name in the GTF header when selecting records.

aaaa
Specifies the address of the ASCB for which records are to be processed. The value of VNAME is compared to the ASCB address in the GTF header when selecting records.

VITTYPE parameter

Use the VITTYPE parameter to specify the VIT record IDs (entry types) to be processed.

The following is an example:

```
►►─┬─────────── VITTYPE=ALL ──────────┬──────────────────────────────────────►◄
   │                                  │
   │                   ┌──────────┐   │
   │                   ▼          │   │
   └─ VITTYPE= ──────── xxxx ─────┴───┘
```

ALL
This is the default if a value is not specified or the parameter is reset. This value specifies that all VIT record IDs are processed.

xxxx
This value identifies the specific record ID or IDs to be processed. You can specify 1 - 10 different VIT record IDs (entry types) with a maximum of 4 characters entered for each ID. The VIT record IDs can be found in z/OS Communications Server: SNA Diagnosis Vol 2, FFST Dumps and the VIT. You do not need to specify LOST entry types, because they always are shown. Entries are not selected for VITTYPE=RE, RELS, REQS, and RESM.

The description explains two types of examples.

VITTYPE=CPP
All entries with record IDs prefixed by CPP are selected (CPP2, CPP3, CPP6).

VITTYPE=CPP2
Only entries with a record ID of CPP2 are selected.

VITSTR parameter

Use the VITSTR parameter to specify a hexadecimal format or character string to select VIT entries.

The following is an example:

```
►►─┬─────────────────────────────────────────────────────────────────────────►◄
   │
   └─ VITSTR= ──┬─ X'xxxxxxxxxxxxxxxx' ─┬─
                │                       │
                └──────── C'cccccccc' ──┘
```

X'*xxxxxxxxxxxxxxxx*'
Specifies a hexadecimal string with a maximum of 8 bytes. ACF/TAP selects VIT entries by scanning the trace records for this string.

C'*cccccccc*'
Specifies a character string with a maximum of 8 characters. ACF/TAP selects VIT entries by scanning the trace records for this string. If the string contains a single quotation mark (’), you must enter another single quotation mark immediately following the first quotation mark or ACF/TAP considers the second mark as the end of the character string. For example, DOESN'T must be entered as C'DOESN''T'. The ending quotation mark must be present, or a syntax error occurs.

WRAP parameter

Use the WRAP parameter with the SDATE/EDATE and STIME/ETIME parameters to select GTF data sets. For information about the date and time parameters, see “S/EDATE and S/ETIME parameters” on page 49.

The following is an example:

```
►►─┬─────────── WRAP=NO ──────────┬──────────────────────────────────────────►◄
   │                              │
   └─ WRAP= ──┬─ YES ────────────┬─
              │                  │
              └─ IGNORE ─────────┘
```

NO

This is the default if a value is not specified or the parameter is reset. A GTF data set stops processing the first time a record is found with a date or time stamp greater than the values specified for EDATE and ETIME.

YES

Specify this value if you want the entire GTF data set scanned for records that match the selection criteria specified in the SDATE, STIME, EDATE, and ETIME settings. This provides support for wrapped GTF data sets.

If data within the requested time or date range appears twice in a wrapped GTF data set, use WRAP=YES to enable formatting of all data within the time requested range.

IGNORE

This value has the same effect as WRAP=YES except that printing of wrap informational messages (as shown) is suppressed.

```
DSJ242I RECORD XXXXXXX CONTINUITY ERROR - TIMESTAMP WRAPAROUND
```

If you specify WRAP=YES or IGNORE, ACF/TAP continues processing wrapped GTF data sets after a specified EDATE or ETIME parameter is exceeded.

Appendix A. Messages

DSJ000I **ACFTAP INTERNAL ERROR - CODE: *xxxxxxxx* RET: *yyyyyyyy***

Explanation

An undefined error code (*xxxxxxxx* in decimal) was supplied to the error print routine. The return code in hexadecimal format is *yyyyyyyy*.

System action

Processing continues.

Operator response

None.

System programmer response

No response is necessary.

User response

Not applicable.

Problem determination

Not applicable.

Source

None.

Module

DSJCEPRT on behalf of "unknown" to SYSPRINT or console.

Routing code

Not applicable.

Descriptor code

Not applicable.

Automation

Not applicable.

Example

None.

DSJ001I **ACFTAP EXECUTION BEGINS**

Explanation

This message is issued as the first action to occur when the main routine (DSJCETAP) is entered.

System action

Processing continues.

Operator response

Not applicable.

System programmer response

No response is necessary.

User response

None.

Problem determination

Not applicable.

Source

None.

Module

DSJCEPRT on behalf of DSJCETAP to console.

Routing code

Not applicable.

Descriptor code

Not applicable.

Automation

Not applicable.

Example

None.

DSJ002I **SYSTRACE/SYS008 INPUT FILE OPENED**

© Copyright IBM Corp. 2000, 2025

Explanation

This message is issued after the successful open of the trace input file.

System action

Processing continues.

Operator response

Not applicable.

System programmer response

No response is necessary.

User response

None.

Problem determination

Not applicable.

Source

None.

Module

DSJCEPRT on behalf of DSJCETAP to SYSPRINT or console.

Routing code

Not applicable.

Descriptor code

Not applicable.

Automation

Not applicable.

Example

None.

DSJ003I SYSTRACE/SYS008 INPUT FILE CLOSED

Explanation

This message is issued after the successful close of the trace input file.

System action

Processing continues.

Operator response

Not applicable.

System programmer response

No response is necessary.

User response

None.

Problem determination

Not applicable.

Source

None.

Module

DSJCEPRT on behalf of DSJCETAP to SYSPRINT or console.

Routing code

Not applicable.

Descriptor code

Not applicable.

Automation

Not applicable.

Example

None.

DSJ004I TRACE FILE PROCESSING BEGINS.....

Explanation

This message is issued before the first input operation performed on the trace input file.

System action

Processing continues.

Operator response

None.

System programmer response

No response is necessary.

User response

Not applicable.

Problem determination

Not applicable.

Source

None.

Module

DSJCEPRT on behalf of DSJCETAP to SYSPRINT or console.

Routing code

Not applicable.

Descriptor code

Not applicable.

Automation

Not applicable.

Example

None.

DSJ005I TRACE FILE END OF FILE

Explanation

This message is issued after an end-of-file condition on the trace input file.

System action

The trace file is closed with a rewind option, permitting reprocessing of the file if wanted. Either you are prompted for additional ACF/TAP parameters if the last parameter was from the system console, or additional parameters are read from the parameter input file if the last parameter was from the file.

Operator response

None.

System programmer response

Enter additional ACF/TAP parameters, as required, or enter QUIT to stop processing.

User response

Not applicable.

Problem determination

Not applicable.

Source

None.

Module

DSJCEPRT on behalf of DSJCETAP to SYSPRINT or console.

Routing code

Not applicable.

Descriptor code

Not applicable.

Automation

Not applicable.

Example

None.

DSJ006I INPUT SELECTION LIMIT(S) ACHIEVED

Explanation

This message is issued when the input selection limits of time, count, or both are reached.

System action

The trace file is closed with a rewind option, permitting reprocessing of the file if wanted. Either you are prompted for additional ACF/TAP parameters if the last parameter was from the system console, or additional parameters are read from the parameter input file if the last parameter was from the file.

Operator response

None.

System programmer response

Examine the time and count input selection limits, correct the error condition, and rerun the job.

User response

Not applicable.

Problem determination

Not applicable.

Source

None.

Module

DSJCEPRT on behalf of DSJCETAP to SYSPRINT or console.

Routing code

Not applicable.

Descriptor code

Not applicable.

Automation

Not applicable.

Example

None.

DSJ007I	TRACE FILE PROCESSING COMPLETE WITH INPUT/OUTPUT ERROR(S)

Explanation

An input operation on the trace input file was not successfully completed. The input record was skipped.

System action

DSJCETAP closes all files and stops immediately. This message is issued after the end-of-file condition occurs and is issued in place of DSJ005I or DSJ006I.

Operator response

None.

System programmer response

Examine SYNAD information, correct the error condition, and rerun the job. SYNAD information, preceded by message DSJ008I, is written to the system log by means of the WTL macro of ACF/TAP. See DSJ231I.

User response

Not applicable.

Problem determination

Not applicable.

Source

None.

Module

DSJCEPRT on behalf of DSJCETAP to SYSPRINT or console.

Routing code

Not applicable.

Descriptor code

Not applicable.

Automation

Not applicable.

Example

None.

DSJ008I	Message text

Explanation

For further information about the SYNAD error field, see z/OS DFSMS Macro Instructions for Data Sets.

System action

Parameter file processing continues (see DSJ025I). Trace file processing continues (see DSJ007I and DSJ231I). Output file processing stops immediately by means of the EROPT=ABE DCB option.

Operator response

None.

System programmer response

Examine the SYNAD error fields, correct the error condition, and rerun the job.

User response

Not applicable.

Problem determination

Not applicable.

Source

None.

Module

DSJCEIOF on behalf of DSJCEIOF to SYSPRINT.

Routing code

Not applicable.

Descriptor code

Not applicable.

Automation

Not applicable.

Example

None.

DSJ010I UNABLE TO OPEN SYSPRINT/SYSLST

Explanation

The SYSPRINT data set cannot be opened.

System action

Processing is stopped immediately by the main routine.

Operator response

None.

System programmer response

Check for a missing JCL statement.

User response

Not applicable.

Problem determination

Not applicable.

Source

None.

Module

DSJCEPRT on behalf of DSJCETAP to console.

Routing code

Not applicable.

Descriptor code

Not applicable.

Automation

Not applicable.

Example

None.

DSJ011I UNABLE TO OPEN SYSSSPRT/SYS002

Explanation

The named output print file could not be opened.

System action

Processing continues until all other output print files are opened. You are then prompted for additional parameters.

Operator response

None.

System programmer response

Do one of the following:

- When prompted for additional parameters, enter QUIT to stop processing immediately, or set

xxxxx=NO to ignore the data sets that could not be opened (*xxxxx* is SSPRT, SDPRT, LSPRT, LDPRT, NEPRT, GSPRT, or DTPRT).

- Check for a missing JCL statement.

User response

Not applicable.

Problem determination

Not applicable.

Source

None.

Module

DSJCEPRT on behalf of DSJCETAP to SYSPRINT or console.

Routing code

Not applicable.

Descriptor code

Not applicable.

Automation

Not applicable.

Example

None.

DSJ012I **UNABLE TO OPEN SYSLSPRT/SYS003**

Explanation

The named output print file could not be opened.

System action

Processing continues until all other output print files are opened. You are then prompted for additional parameters.

Operator response

None.

System programmer response

Do one of the following:

- When prompted for additional parameters, enter QUIT to stop processing immediately, or set *xxxxx*=NO to ignore the data sets that could not be opened (*xxxxx* is SSPRT, SDPRT, LSPRT, LDPRT, NEPRT, GSPRT, or DTPRT).
- Check for a missing JCL statement.

User response

Not applicable.

Problem determination

Not applicable.

Source

None.

Module

DSJCEPRT on behalf of DSJCETAP to SYSPRINT or console.

Routing code

Not applicable.

Descriptor code

Not applicable.

Automation

Not applicable.

Example

None.

DSJ013I **UNABLE TO OPEN SYSNEPRT/SYS004**

Explanation

The named output print file could not be opened.

System action

Processing continues until all other output print files are opened. You are then prompted for additional parameters.

Operator response

None.

System programmer response

Do one of the following:

- When prompted for additional parameters, enter QUIT to stop processing immediately, or set *xxxxx*=NO to ignore the data sets that could not be opened (*xxxxx* is SSPRT, SDPRT, LSPRT, LDPRT, NEPRT, GSPRT, or DTPRT).
- Check for a missing JCL statement.

User response

Not applicable.

Problem determination

Not applicable.

Source

None.

Module

DSJCEPRT on behalf of DSJCETAP to SYSPRINT or console.

Routing code

Not applicable.

Descriptor code

Not applicable.

Automation

Not applicable.

Example

None.

DSJ014I UNABLE TO OPEN SYSDTPRT/SYS005

Explanation

The named output print file could not be opened.

System action

Processing continues until all other output print files are opened. You are then prompted for additional parameters.

Operator response

None.

System programmer response

Do one of the following:

- When prompted for additional parameters, enter QUIT to stop processing immediately, or set *xxxxx*=NO to ignore the data sets that could not be opened (*xxxxx* is SSPRT, SDPRT, LSPRT, LDPRT, NEPRT, GSPRT, or DTPRT).
- Check for a missing JCL statement.

User response

Not applicable.

Problem determination

Not applicable.

Source

None.

Module

DSJCEPRT on behalf of DSJCETAP to SYSPRINT or console.

Routing code

Not applicable.

Descriptor code

Not applicable.

Automation

Not applicable.

Example

None.

DSJ015I UNABLE TO OPEN SYSSDPRT/SYS006

Explanation

The named output print file could not be opened.

System action

Processing continues until all other output print files are opened. You are then prompted for additional parameters.

Operator response

None.

System programmer response

Do one of the following:

- When prompted for additional parameters, enter QUIT to stop processing immediately, or set *xxxxx*=NO to ignore the data sets that could not be opened (*xxxxx* is SSPRT, SDPRT, LSPRT, LDPRT, NEPRT, GSPRT, or DTPRT).
- Check for a missing JCL statement.

User response

Not applicable.

Problem determination

Not applicable.

Source

None.

Module

DSJCEPRT on behalf of DSJCETAP to SYSPRINT or console.

Routing code

Not applicable.

Descriptor code

Not applicable.

Automation

Not applicable.

Example

None.

DSJ016I UNABLE TO OPEN SYSLDPRT/SYS007

Explanation

The named output print file could not be opened.

System action

Processing continues until all other output print files are opened. You are then prompted for additional parameters.

Operator response

None.

System programmer response

Do one of the following:

- When prompted for additional parameters, enter QUIT to stop processing immediately, or *xxxxx*=NO to ignore the data sets that could not be opened (*xxxxx* is SSPRT, SDPRT, LSPRT, LDPRT, NEPRT, GSPRT, or DTPRT).
- Check for a missing JCL statement.

User response

Not applicable.

Problem determination

Not applicable.

Source

None.

Module

DSJCEPRT on behalf of DSJCETAP to SYSPRINT or console.

Routing code

Not applicable.

Descriptor code

Not applicable.

Automation

Not applicable.

Example

None.

DSJ017I UNABLE TO OPEN SYSTRACE/SYS008

Explanation

Either the trace input file could not be opened, or the trace input file was assigned IGN.

System action

The main routine stops immediately after closing the files that have been opened.

Operator response

None.

System programmer response

Check for a missing JCL statement.

User response

Not applicable.

Problem determination

Not applicable.

Source

None.

Module

DSJCEPRT on behalf of DSJCETAP to SYSPRINT or console.

Routing code

Not applicable.

Descriptor code

Not applicable.

Automation

Not applicable.

Example

None.

DSJ018I UNABLE TO OPEN SYSIN/SYSIPT

Explanation

The parameter input file cannot be opened either initially or in response to a READ command issued to DSJCETAP from the console. The OPEN failed in response to a READ command from the console.

System action

Processing continues, and you are prompted for parameters.

Operator response

None.

System programmer response

Do one of the following:

- Enter ACF/TAP parameters as required.
- Check for a missing JCL statement.

System Action:
The main routine stops immediately after closing the files that have been opened.

User response

Not applicable.

Problem determination

Not applicable.

Source

None.

Module

DSJCEPRT on behalf of DSJCPARM to SYSPRINT or console.

Routing code

Not applicable.

Descriptor code

Not applicable.

Automation

Not applicable.

Example

None.

DSJ019I UNABLE TO OPEN SYSVTPRT/SYS011

Explanation

The trace output file could not be opened.

System action

Processing continues until all other output print files are opened. You are then prompted for additional parameters.

Operator response

None.

System programmer response

Do one of the following:

- When prompted for additional parameters, enter QUIT to stop processing immediately, or VTPRT=NO to ignore the data set that could not be opened.
- Check for a missing JCL statement.

User response

Not applicable.

Problem determination

Not applicable.

Source

None.

Module

DSJCEPRT on behalf of DSJCETAP to SYSPRINT or console.

Routing code

Not applicable.

Descriptor code

Not applicable.

Automation

Not applicable.

Example

None.

DSJ020A ENTER ACFTAP PARAMETERS OR READ, QUIT, LIST, GO, RESET

Explanation

You are prompted to enter input parameters or the commands READ, QUIT, LIST, GO, or RESET.

System action

Program waits for input from the console.

Operator response

None.

System programmer response

Enter input parameters or one of the following commands:

- READ reads parameters from the parameter input file.
- QUIT stops the execution of ACF/TAP immediately.
- LIST provides for a console listing of all parameters and their current values.
- GO causes the input trace file to be processed by ACF/TAP.
- RESET resets all parameters to their default values.

See "ACF/TAP commands" on page 17 for more information.

User response

Not applicable.

Problem determination

Not applicable.

Source

None.

Module

DSJCEPRT on behalf of DSJCPARM to SYSPRINT or console.

Routing code

Not applicable.

Descriptor code

Not applicable.

Automation

Not applicable.

Example

None.

DSJ021I PARAMETERS ARE RESET TO DEFAULT STATUS

Explanation

One of the following has occurred:

- The parameter input routine has been entered.
- The RESET command has been entered.

System action

Processing continues.

Operator response

None.

System programmer response

No response is necessary.

User response

Not applicable.

Problem determination

Not applicable.

Source

None.

Module

DSJCEPRT on behalf of DSJCPARM to SYSPRINT or console.

Routing code

Not applicable.

Descriptor code

Not applicable.

Automation

Not applicable.

Example

None.

DSJ022I SYSIN/SYSIPT PARAMETER INPUT FILE OPENED

Explanation

The parameter input file has been successfully opened.

System action

Processing continues, and the following parameters are read from the parameter input file until a command is read:

- LIST is ignored.
- READ is ignored.
- RESET causes the parameters to be reset to their default values.
- GO starts the processing of the trace input file.
- QUIT causes the execution of ACF/TAP to stop immediately.
- PROMPT causes the program to stop reading from the parameter input file and prompts you for additional input from the console.

Operator response

None.

System programmer response

No response is necessary.

User response

Not applicable.

Problem determination

Not applicable.

Source

None.

Module

DSJCEPRT on behalf of DSJCPARM to SYSPRINT or console.

Routing code

Not applicable.

Descriptor code

Not applicable.

Automation

Not applicable.

Example

None.

DSJ023I **PARAMETER FILE INPUT COMPLETE**

Explanation

An end-of-file condition occurred on the parameter input file.

System action

Processing continues, and you are prompted for additional parameter input.

Operator response

None.

System programmer response

Enter additional ACF/TAP parameters or commands from the console.

User response

Not applicable.

Problem determination

Not applicable.

Source

None.

Module

DSJCEPRT on behalf of DSJCPARM to SYSPRINT or console.

Routing code

Not applicable.

Descriptor code

Not applicable.

Automation

Not applicable.

Example

None.

DSJ024I **PARAMETER FILE ALREADY ACCESSED**

Explanation

A READ command was entered after either an error condition or an end of file occurred on the parameter input file.

System action

Processing continues, and the READ command is ignored.

Operator response

None.

System programmer response

Enter additional ACF/TAP parameters or commands. Do not enter the READ command.

User response

Not applicable.

Problem determination

Not applicable.

Source

None.

Module

DSJCEPRT on behalf of DSJCPARM to SYSPRINT or console.

Routing code

Not applicable.

Descriptor code

Not applicable.

Automation

Not applicable.

Example

None.

DSJ025I PERMANENT ERROR ON PARAMETER INPUT FILE

Explanation

An input operation from the parameter input file was not successfully completed.

System action

Processing continues, and you are prompted for additional ACF/TAP parameters or commands.

Operator response

None.

System programmer response

Do one of the following:

- Enter additional ACF/TAP parameters or commands.
- Examine the SYNAD information, correct the error condition, and rerun the job.

Note: SYNAD information, preceded by message DSJ008I, is sent to the system log by means of the WTL macro.

User response

Not applicable.

Problem determination

Not applicable.

Source

None.

Module

DSJCEPRT on behalf of DSJCPARM to SYSPRINT or console.

Routing code

Not applicable.

Descriptor code

Not applicable.

Automation

Not applicable.

Example

None.

DSJ026I INVALID SYNTAX - REMAINDER OF RECORD IGNORED

Explanation

A syntax error occurred in the parameter record currently being processed.

System action

Processing continues and the remainder of the record is ignored. A prompt for corrections is made if the input is from the parameter input file.

Operator response

None.

System programmer response

Enter correct ACF/TAP parameters or commands when prompted.

Note: This message is followed by two additional messages: Either DSJ029I if the input was from the console or DSJ089I if the input was from the parameter input file, and DSJ028I showing the approximate position where the syntax error occurred.

User response

Not applicable.

Problem determination

Not applicable.

Source

None.

Module

DSJCEPRT on behalf of DSJCPARM to SYSPRINT or console.

Routing code

Not applicable.

Descriptor code

Not applicable.

Automation

Not applicable.

Example

None.

DSJ027I **UNABLE TO OPEN SYSGSPRT/SYS010**

Explanation

The named output print file could not be opened.

System action

Processing continues until all other output print files are opened. You are then prompted for additional parameters.

Operator response

None.

System programmer response

Do one of the following:

- When prompted for additional parameters, enter QUIT to stop processing immediately, or set *xxxxx*=NO to ignore the data sets that could not be opened (*xxxxx* is SSPRT, SDPRT, LSPRT, LDPRT, NEPRT, GSPRT, or DTPRT).
- Check for a missing JCL FILEDEF statement.

User response

Not applicable.

Problem determination

Not applicable.

Source

None.

Module

DSJCEPRT on behalf of DSJCETAP to SYSPRINT or console.

Routing code

Not applicable.

Descriptor code

Not applicable.

Automation

Not applicable.

Example

None.

DSJ028I **DSJCEPRT on behalf of DSJCPARM to SYSPRINT or console.**

Explanation

This message is always preceded by either message DSJ029I or DSJ089I. The vertical indicator (|) points to the approximate location in the message text of DSJ029I or DSJ089I where scanning of the input parameter stopped because of a syntax error.

System action

Processing continues and the current input parameter is ignored.

Operator response

None.

System programmer response

Enter the correct parameter when prompted.

User response

Not applicable.

Problem determination

Not applicable.

Source

None.

Module

DSJCEPRT on behalf of DSJCPARM to SYSPRINT or console.

Routing code

Not applicable.

Descriptor code

Not applicable.

Automation

Not applicable.

Example

None.

DSJ029I **Message text**

Explanation

The message text shows the current input parameter value from the console.

System action

Processing continues.

Note: This message is sent to SYSPRINT for every input parameter from the console and is followed by message DSJ028I if an error is detected in the input.

Operator response

None.

System programmer response

No response is necessary.

User response

Not applicable.

Problem determination

Not applicable.

Source

None.

Module

DSJCEPRT on behalf of DSJCPARM to SYSPRINT or console.

Routing code

Not applicable.

Descriptor code

Not applicable.

Automation

Not applicable.

Example

None.

DSJ030I ***yyyyyyyy* INCORRECT FOR *xxxxxxxx***

Explanation

The parameter value *yyyyyyyy* is not valid for the keyword *xxxxxxxx*. (*xxxxxxxx*=*yyyyyyyy* is not correct.)

System action

Processing continues.

Operator response

None.

System programmer response

Enter correct parameter when prompted for additional ACF/TAP parameters or commands. See Chapter 4, “ACF/TAP parameters,” on page 21 for information about ACF/TAP parameters.

User response

Not applicable.

Problem determination

Not applicable.

Source

None.

Module

DSJCEPRT on behalf of DSJCPARM to SYSPRINT or console.

Routing code

Not applicable.

Descriptor code

Not applicable.

Automation

Not applicable.

Example

None.

DSJ031I INVALID KEYWORD: *xxxxxxxx*

Explanation

The keyword *xxxxxxxx* is not recognized.

System action

Processing continues.

Operator response

None.

System programmer response

Enter correct parameter when prompted for additional ACF/TAP parameters or commands. See Chapter 4, “ACF/TAP parameters,” on page 21 for information about ACF/TAP parameters.

User response

Not applicable.

Problem determination

Not applicable.

Source

None.

Module

DSJCEPRT on behalf of DSJCPARM to SYSPRINT or console.

Routing code

Not applicable.

Descriptor code

Not applicable.

Automation

Not applicable.

Example

None.

DSJ032I INVALID PARAMETER: *xxxxxxxx*

Explanation

The parameter value *xxxxxxxx* is not recognized.

System action

Processing continues.

Operator response

None.

System programmer response

Enter correct parameter when prompted for additional ACF/TAP parameters or commands. See Chapter 4, “ACF/TAP parameters,” on page 21 for information about ACF/TAP parameters.

User response

Not applicable.

Problem determination

Not applicable.

Source

None.

Module

DSJCEPRT on behalf of DSJCPARM to SYSPRINT or console.

Routing code

Not applicable.

Descriptor code

Not applicable.

Automation

Not applicable.

Example

None.

DSJ033I INVALID TIME LIMITS - IGNORED

Explanation

The starting time (STIME) is greater than the ending time (ETIME) and the starting date (SDATE) is equal to the ending date (EDATE).

System action

Processing continues.

Operator response

None.

System programmer response

Enter correct time limits when prompted for additional ACF/TAP parameters or commands. See Chapter 4, “ACF/TAP parameters,” on page 21 for information about ACF/TAP parameters or the interactions and default values for the SDATE, EDATE, STIME, and ETIME parameters.

User response

Not applicable.

Problem determination

Not applicable.

Source

None.

Module

DSJCEPRT on behalf of DSJCPARM to SYSPRINT or console.

Routing code

Not applicable.

Descriptor code

Not applicable.

Automation

Not applicable.

Example

None.

DSJ034I **INVALID COUNT LIMITS - IGNORED**

Explanation

For the selection of trace records, the starting count (START) is greater than the ending count (END).

System action

Processing continues.

Operator response

None.

System programmer response

Enter the correct count limits when prompted for additional ACF/TAP parameters or commands. See Chapter 4, “ACF/TAP parameters,” on page 21 for information about ACF/TAP parameters.

User response

Not applicable.

Problem determination

Not applicable.

Source

None.

Module

DSJCEPRT on behalf of DSJCPARM to SYSPRINT or console.

Routing code

Not applicable.

Descriptor code

Not applicable.

Automation

Not applicable.

Example

None.

DSJ035I **INVALID TIMEOUT LIMIT (0 To 255 ONLY)**

Explanation

The timeout limit (TIMEOUT) exceeded a value of 255 (25.5 seconds).

System action

The input is ignored, and the timeout limit is reset to the default value of 010 (1 second).

Operator response

None.

System programmer response

Enter correct timeout value when prompted for additional ACF/TAP parameters or commands. See Chapter 4, "ACF/TAP parameters," on page 21 for information about ACF/TAP parameters.

User response

Not applicable.

Problem determination

Not applicable.

Source

None.

Module

DSJCEPRT on behalf of DSJCPARM to SYSPRINT or console.

Routing code

Not applicable.

Descriptor code

Not applicable.

Automation

Not applicable.

Example

None.

DSJ036I UNABLE TO OPEN SYSIXPRT/SYS012

Explanation

The named output print file could not be opened.

System action

Processing continues until all other output print or sort/work files are opened. You are then prompted for additional parameters.

Operator response

None.

System programmer response

Do one of the following:

- When prompted for additional parameters, enter QUIT to stop processing immediately, or xxxxx=NO to ignore the data sets that could not be opened.
- Check for a missing JCL statement.

User response

Not applicable.

Problem determination

Not applicable.

Source

None.

Module

DSJCEPRT on behalf of DSJCPARM to SYSPRINT or console.

Routing code

Not applicable.

Descriptor code

Not applicable.

Automation

Not applicable.

Example

None.

DSJ037I INVALID MAXSUBA (3, 7, 15, 31, 63, 127, 255 ONLY)

Explanation

The specified MAXSUBA is not one of the seven valid values.

System action

Processing continues and the MAXSUBA value is reset to the default of 15.

Operator response

None.

System programmer response

Enter correct MAXSUBA when prompted for additional ACF/TAP parameters or commands. See Chapter 4, "ACF/TAP parameters," on page 21 for information about ACF/TAP parameters.

User response

Not applicable.

Problem determination

Not applicable.

Source

None.

Module

DSJCEPRT on behalf of DSJCPARM to SYSPRINT or console.

Routing code

Not applicable.

Descriptor code

Not applicable.

Automation

Not applicable.

Example

None.

DSJ038I ***xxxx* = (*sss*,*eeeee*) INVALID - IGNORED**

Explanation

The SSCP or CDRM (*xxxx*) subarea and element combination is not valid because of one of the following conditions:

- The subarea (*sss*) is equal to 0 or greater than 255.
- The element (*eeeeee*) is greater than 16381.
- The element (*eeeeee*) is greater than the maximum number of elements possible with the specified MAXSUBA keyword value.

System action

Processing continues, and the address is not reset.

Operator response

None.

System programmer response

If the address is incorrect, enter the correct subarea and element for the SSCP or CDRM (see SSCP and CDRM parameters in *NCP, SSP, and EP Diagnosis Guide*, LY43-0033).

If the MAXSUBA value was incorrect, enter the correct MAXSUBA value (see the MAXSUBA parameter in *NCP, SSP, and EP Diagnosis Guide*, LY43-0033). After correcting MAXSUBA, the subarea and element address can be corrected.

To eliminate an SSCP or CDRM entry for a particular subarea (*sss*), enter SSCP=*sss* or CDRM=*sss*.

SSCP and CDRM addresses must be supplied to ACF/TAP so it can recognize and decode network services commands and responses (ACTLINK or SETCV). Network addresses for SSCP and CDRM components can be found in the following place:

- For VTAM the network can be found in the network definition member of the partitioned data set SYS.VTAMLST.

User response

Not applicable.

Problem determination

Not applicable.

Source

None.

Module

DSJCEPRT on behalf of DSJCPARM to SYSPRINT or console.

Routing code

Not applicable.

Descriptor code

Not applicable.

Automation

Not applicable.

Example

None.

DSJ039I INVALID LINECOUNT - IGNORED

Explanation

The LINECNT limit was less than 25 lines per page.

System action

The input is ignored and the LINECNT parameter is reset to 60.

Operator response

None.

System programmer response

Enter correct LINECNT when prompted for additional ACF/TAP parameters or commands.

See Chapter 4, “ACF/TAP parameters,” on page 21 for information about ACF/TAP parameters.

User response

Not applicable.

Problem determination

Not applicable.

Source

None.

Module

DSJCEPRT on behalf of DSJCPARM to SYSPRINT or console.

Routing code

Not applicable.

Descriptor code

Not applicable.

Automation

Not applicable.

Example

None.

DSJ040I INPUT IGNORED - MAX NUMBER OF INDEX PARAMETERS EXCEEDED (20)

Explanation

More index parameters were specified than ACF/TAP can process.

System action

Only the first 20 index parameters specified are used. ACF/TAP ignores the remainder of the index parameters that were specified.

Operator response

None.

System programmer response

Run ACF/TAP a second time specifying the parameters that were ignored during the first run to obtain processing for all of the parameters that were originally specified.

User response

Not applicable.

Problem determination

Not applicable.

Source

None.

Module

DSJCEPRT on behalf of DSJCPARM to SYSPRINT or console.

Routing code

Not applicable.

Descriptor code

Not applicable.

Automation

Not applicable.

Example

None.

DSJ041I UNABLE TO OPEN SYSNTPRT/SYS015

Explanation

The named output print file could not be opened.

System action

Processing continues until all other output print or sort and work files are opened. You are then prompted for additional parameters.

Operator response

None.

System programmer response

Do one of the following:

- When prompted for additional parameters, enter either QUIT to stop processing immediately, or xxxxx=NO to ignore the data sets that could not be opened.
- Check for a missing JCL statement.

User response

Not applicable.

Problem determination

Not applicable.

Source

None.

Module

DSJCEPRT on behalf of DSJCPARM to SYSPRINT or console.

Routing code

Not applicable.

Descriptor code

Not applicable.

Automation

Not applicable.

Example

None.

DSJ042I UNABLE TO OPEN SYSNPPRT/SYS016

Explanation

The named output print file could not be opened.

System action

Processing continues until all other output print or sort and work files are opened. You are then prompted for additional parameters.

Operator response

None.

System programmer response

Do one of the following:

- When prompted for additional parameters, enter either QUIT to stop processing immediately, or xxxxx=NO to ignore the data sets that could not be opened.
- Check for a missing JCL statement.

User response

Not applicable.

Problem determination

Not applicable.

Source

None.

Module

DSJCEPRT on behalf of DSJCPARM to SYSPRINT or console.

Routing code

Not applicable.

Descriptor code

Not applicable.

Automation

Not applicable.

Example

None.

DSJ043I **UNABLE TO OPEN SORTIN/ SYSW1PRT/SYS013**

Explanation

The named sort and work file could not be opened.

System action

The main routine stops immediately after closing the files that were opened.

Operator response

None.

System programmer response

Check for a missing JCL statement. Make sure that the sort and work files are defined in the JCL.

User response

Not applicable.

Problem determination

Not applicable.

Source

None.

Module

DSJCEPRT on behalf of DSJCPARM to SYSPRINT or console.

Routing code

Not applicable.

Descriptor code

Not applicable.

Automation

Not applicable.

Example

None.

DSJ044I **UNABLE TO OPEN SORTOUT/ SYSW2PRT/SYS014**

Explanation

The named sort and work file could not be opened.

System action

The main routine stops immediately after closing the files that were opened.

Operator response

None.

System programmer response

Check for a missing JCL statement. Make sure that the sort and work files are defined in the JCL.

User response

Not applicable.

Problem determination

Not applicable.

Source

None.

Module

DSJCEPRT on behalf of DSJCPARM to SYSPRINT or console.

Routing code

Not applicable.

Descriptor code

Not applicable.

Automation

Not applicable.

Example

None.

DSJ045I **UNABLE TO OPEN SYSLUPRT/ SYS017**

Explanation

The following occurred:

- The trace output file could not be opened.

System action

Processing continues until all other output print files are opened. You are then prompted for additional parameters.

Operator response

None.

System programmer response

Check for a missing JCL statement.

User response

Not applicable.

Problem determination

Not applicable.

Source

None.

Module

DSJCEPRT on behalf of DSJCPARM to SYSPRINT or console.

Routing code

Not applicable.

Descriptor code

Not applicable.

Automation

Not applicable.

Example

None.

DSJ046I **INVALID DATE PARAMETERS - IGNORED**

Explanation

The starting date (SDATE) is greater than the ending date (EDATE).

System action

Processing continues.

Operator response

None.

System programmer response

Enter correct date limits when prompted for additional ACF/TAP parameters or commands.

See Chapter 4, “ACF/TAP parameters,” on page 21 for more information about either ACF/TAP parameters or interactions and default values for the SDATE and EDATE parameters.

User response

Not applicable.

Problem determination

Not applicable.

Source

None.

Module

DSJCEPRT on behalf of DSJCPARM to SYSPRINT or console.

Routing code

Not applicable.

Descriptor code

Not applicable.

Automation

Not applicable.

Example

None.

DSJ047I **WRAP = *x* Y=YES N=NO I=IGNORE (WRAPPED DATA SET)**

Explanation

This message is issued to the console, along with message DSJ047I, messages DSJ090I to DSJ098I, messages DSJ275I to DSJ279I, and message DSJ290I. It is issued in response to either the LIST command entered at the console, or to SYSPRINT in response to the GO command issued from either the console or the parameter input file. When output is to SYSPRINT, the only messages printed are those whose default values were used, or those whose values were specified by the user and used during the processing of the trace file.

System action

Processing continues.

Operator response

None.

System programmer response

No response is necessary.

User response

Not applicable.

Problem determination

Not applicable.

Source

None.

Module

DSJCEPRT on behalf of DSJCPARM to SYSPRINT or console.

Routing code

Not applicable.

Descriptor code

Not applicable.

Automation

Not applicable.

Example

None.

DSJ048I **NODE DEFAULTED ON GPT INPUT - TO SPECIFY NODES USE GPTNODE**

Explanation

The node parameter is not valid for INPUT=GPT. The parameter GPTNODE has been added to allow for node processing for GPT input.

System action

Processing continues.

Operator response

None.

System programmer response

Enter a node using GPTNODE or enter INPUT=ALL.

See Chapter 4, “ACF/TAP parameters,” on page 21 for information about ACF/TAP parameters.

User response

Not applicable.

Problem determination

Not applicable.

Source

None.

Module

DSJCEPRT on behalf of DSJCPARM to SYSPRINT or console.

Routing code

Not applicable.

Descriptor code

Not applicable.

Automation

Not applicable.

Example

None.

DSJ049I **NCPNAME IS ONLY VALID WHEN INPUT=GPT OR INPUT=ALL**

Explanation

The NCPNAME parameter can be used only when INPUT=GPT or INPUT=ALL is specified.

System action

Processing continues.

Operator response

None.

System programmer response

Either reenter the command with an INPUT parameter of GPT or ALL, or do not use the NCPNAME parameter.

See Chapter 4, “ACF/TAP parameters,” on page 21 for more information about the NCPNAME and INPUT parameters.

User response

Not applicable.

Problem determination

Not applicable.

Source

None.

Module

DSJCEPRT on behalf of DSJCPARM to SYSPRINT or console.

Routing code

Not applicable.

Descriptor code

Not applicable.

Automation

Not applicable.

Example

None.

DSJ050I **ACFTAP PARAMETERS**

Explanation

This message is issued to the console, along with message DSJ047I, messages DSJ090I to DSJ098I, messages DSJ275I to DSJ279I, and message DSJ290I. It is issued in response to either the LIST command entered at the console, or to SYSPRINT in response to the GO command issued from either the console or the parameter input file. When output is to SYSPRINT, the only messages printed are those whose default values were used, or those whose values were specified by the user and used during the processing of the trace file.

System action

Processing continues.

Operator response

None.

System programmer response

No response is necessary.

User response

Not applicable.

Problem determination

Not applicable.

Source

None.

Module

DSJCEPRT on behalf of DSJCPARM to SYSPRINT or console.

Routing code

Not applicable.

Descriptor code

Not applicable.

Automation

Not applicable.

Example

None.

DSJ051I **INPUT = x S=SCAN L=LINE B=BUFFER(PIU) I=IO(RNIO) A=ALL G=GPT N=NETCTLR V=VIT**

Explanation

This message is issued to the console, along with message DSJ047I, messages DSJ090I to DSJ098I, messages DSJ275I to DSJ279I, and message DSJ290I. It is issued in response to either the LIST command entered at the console, or to SYSPRINT in response to the GO command issued from either the console or the parameter input file. When output is to SYSPRINT, the only messages printed are those whose default values were used, or those whose values were specified by the user and used during the processing of the trace file.

System action

Processing continues.

Operator response

None.

System programmer response

No response is necessary.

User response

Not applicable.

Problem determination

Not applicable.

Source

None.

Module

DSJCEPRT on behalf of DSJCPARM to SYSPRINT or console.

Routing code

Not applicable.

Descriptor code

Not applicable.

Automation

Not applicable.

Example

None.

DSJ052I **SOURCE = x F=GTF D=DOS C=COMWRITE A=APPN**

Explanation

This message is issued to the console, along with message DSJ047I, messages DSJ090I to DSJ098I, messages DSJ275I to DSJ279I, and message DSJ290I. It is issued in response to either the LIST command entered at the console, or to SYSPRINT in response to the GO command issued from either the console or the parameter input file. When output is to SYSPRINT, the only messages printed are those whose default values were used, or those whose values were specified by the user and used during the processing of the trace file.

System action

Processing continues.

Operator response

None.

System programmer response

No response is necessary.

User response

Not applicable.

Problem determination

Not applicable.

Source

None.

Module

DSJCEPRT on behalf of DSJCPARM to SYSPRINT or console.

Routing code

Not applicable.

Descriptor code

Not applicable.

Automation

Not applicable.

Example

None.

DSJ053I **LDPRT = x Y=YES N=NO E=ERROR I=IP S=SNA (LINE TRACE DETAIL)**

Explanation

This message is issued to the console, along with message DSJ047I, messages DSJ090I to DSJ098I, messages DSJ275I to DSJ279I, and message DSJ290I. It is issued in response to either the LIST command entered at the console, or to SYSPRINT in response to the GO command issued from either the console or the parameter input file. When output is to SYSPRINT, the only messages printed are those whose default values were used, or those whose values were specified by the user and used during the processing of the trace file.

System action

Processing continues.

Operator response

None.

System programmer response

No response is necessary.

User response

Not applicable.

Problem determination

Not applicable.

Source

None.

Module

DSJCEPRT on behalf of DSJCPARM to SYSPRINT or console.

Routing code

Not applicable.

Descriptor code

Not applicable.

Automation

Not applicable.

Example

None.

DSJ054I **LSPRT = x Y=YES N=NO I=IP S=SNA (LINE TRACE SUMMARY)**

Explanation

This message is issued to the console, along with message DSJ047I, messages DSJ090I to DSJ098I, messages DSJ275I to DSJ279I, and message DSJ290I. It is issued in response to either the LIST command entered at the console, or to SYSPRINT in response to the GO command issued from either the console or the parameter input file. When output is to SYSPRINT, the only messages printed are those whose default values were used, or those whose values were specified by the user and used during the processing of the trace file.

System action

Processing continues.

Operator response

None.

System programmer response

No response is necessary.

User response

Not applicable.

Problem determination

Not applicable.

Source

None.

Module

DSJCEPRT on behalf of DSJCPARM to SYSPRINT or console.

Routing code

Not applicable.

Descriptor code

Not applicable.

Automation

Not applicable.

Example

None.

DSJ055I **SDPRT = x Y=YES N=NO (SNA DETAIL)**

Explanation

This message is issued to the console, along with message DSJ047I, messages DSJ090I to DSJ098I, messages DSJ275I to DSJ279I, and message DSJ290I. It is issued in response to either the LIST command entered at the console, or to SYSPRINT in response to the GO command issued from either the console or the parameter input file. When output is to SYSPRINT, the only messages printed are those whose default values were used, or those whose values were specified by the user and used during the processing of the trace file.

System action

Processing continues.

Operator response

None.

System programmer response

No response is necessary.

User response

Not applicable.

Problem determination

Not applicable.

Source

None.

Module

DSJCEPRT on behalf of DSJCPARM to SYSPRINT or console.

Routing code

Not applicable.

Descriptor code

Not applicable.

Automation

Not applicable.

Example

None.

DSJ056I **SSPRT = x Y=YES N=NO (SNA SUMMARY)**

Explanation

This message is issued to the console, along with message DSJ047I, messages DSJ090I to DSJ098I, messages DSJ275I to DSJ279I, and message DSJ290I. It is issued in response to either the LIST command entered at the console, or to SYSPRINT in response to the GO command issued from either the console or the parameter input file. When output is to SYSPRINT, the only messages printed are those whose default values were used, or those whose values were specified by the user and used during the processing of the trace file.

System action

Processing continues.

Operator response

None.

System programmer response

No response is necessary.

User response

Not applicable.

Problem determination

Not applicable.

Source

None.

Module

DSJCEPRT on behalf of DSJCPARM to SYSPRINT or console.

Routing code

Not applicable.

Descriptor code

Not applicable.

Automation

Not applicable.

Example

None.

DSJ057I **DTPRT = x Y=YES N=NO (NETWORK DATA TRAFFIC)**

Explanation

This message is issued to the console, along with message DSJ047I, messages DSJ090I to DSJ098I, messages DSJ275I to DSJ279I, and message DSJ290I. It is issued in response to either the LIST command entered at the console, or to SYSPRINT in response to the GO command issued from either the console or the parameter input file. When output is to SYSPRINT, the only messages printed are those whose default values were used, or those whose values were specified by the user and used during the processing of the trace file.

System action

Processing continues.

Operator response

None.

System programmer response

No response is necessary.

User response

Not applicable.

Problem determination

Not applicable.

Source

None.

Module

DSJCEPRT on behalf of DSJCPARM to SYSPRINT or console.

Routing code

Not applicable.

Descriptor code

Not applicable.

Automation

Not applicable.

Example

None.

DSJ058I **NEPRT = x Y=YES N=NO (NETWORK ERROR)**

Explanation

This message is issued to the console, along with message DSJ047I, messages DSJ090I to DSJ098I, messages DSJ275I to DSJ279I, and message DSJ290I. It is issued in response to either the LIST command entered at the console, or to SYSPRINT in response to the GO command issued from either the console or the parameter input file. When output is to SYSPRINT, the only messages printed are those whose default values were used, or those whose values were

specified by the user and used during the processing of the trace file.

System action

Processing continues.

Operator response

None.

System programmer response

No response is necessary.

User response

Not applicable.

Problem determination

Not applicable.

Source

None.

Module

DSJCEPRT on behalf of DSJCPARM to SYSPRINT or console.

Routing code

Not applicable.

Descriptor code

Not applicable.

Automation

Not applicable.

Example

None.

DSJ059I SUMMARY = x Y=YES N=NO A=ALL E=EVERY (INPUT SUMMARY)

Explanation

This message is issued to the console, along with message DSJ047I, messages DSJ090I to DSJ098I, messages DSJ275I to DSJ279I, and message DSJ290I. It is issued in response to either the LIST command entered at the console, or to SYSPRINT in response to the GO command issued from either the console or the parameter input file. When output is to SYSPRINT, the only messages printed are those whose default values were used, or those whose values were specified by the user and used during the processing of the trace file.

System action

Processing continues.

Operator response

None.

System programmer response

No response is necessary.

User response

Not applicable.

Problem determination

Not applicable.

Source

None.

Module

DSJCEPRT on behalf of DSJCPARM to SYSPRINT or console.

Routing code

Not applicable.

Descriptor code

Not applicable.

Automation

Not applicable.

Example

None.

DSJ060I DUMP = x Y=YES N=NO (TRACE RECORD DUMP))

Explanation

This message is issued to the console, along with message DSJ047I, messages DSJ090I to DSJ098I, messages DSJ275I to DSJ279I, and message

DSJ290I. It is issued in response to either the LIST command entered at the console, or to SYSPRINT in response to the GO command issued from either the console or the parameter input file. When output is to SYSPRINT, the only messages printed are those whose default values were used, or those whose values were specified by the user and used during the processing of the trace file.

System action

Processing continues.

Operator response

None.

System programmer response

No response is necessary.

User response

Not applicable.

Problem determination

Not applicable.

Source

None.

Module

DSJCEPRT on behalf of DSJCPARM to SYSPRINT or console.

Routing code

Not applicable.

Descriptor code

Not applicable.

Automation

Not applicable.

Example

None.

DSJ061I **START = *nnnnnnnn* (SELECT START COUNT)**

Explanation

This message is issued to the console, along with message DSJ047I, messages DSJ090I to DSJ098I, messages DSJ275I to DSJ279I, and message DSJ290I. It is issued in response to either the LIST command entered at the console, or to SYSPRINT in response to the GO command issued from either the console or the parameter input file. When output is to SYSPRINT, the only messages printed are those whose default values were used, or those whose values were specified by the user and used during the processing of the trace file.

System action

Processing continues.

Operator response

None.

System programmer response

No response is necessary.

User response

Not applicable.

Problem determination

Not applicable.

Source

None.

Module

DSJCEPRT on behalf of DSJCPARM to SYSPRINT or console.

Routing code

Not applicable.

Descriptor code

Not applicable.

Automation

Not applicable.

Example

None.

DSJ062I **END = *nnnnnnnn* (SELECT END COUNT)**

Explanation

This message is issued to the console, along with message DSJ047I, messages DSJ090I to DSJ098I, messages DSJ275I to DSJ279I, and message DSJ290I. It is issued in response to either the LIST command entered at the console, or to SYSPRINT in response to the GO command issued from either the console or the parameter input file. When output is to SYSPRINT, the only messages printed are those whose default values were used, or those whose values were specified by the user and used during the processing of the trace file.

System action

Processing continues.

Operator response

None.

System programmer response

No response is necessary.

User response

Not applicable.

Problem determination

Not applicable.

Source

None.

Module

DSJCEPRT on behalf of DSJCPARM to SYSPRINT or console.

Routing code

Not applicable.

Descriptor code

Not applicable.

Automation

Not applicable.

Example

None.

DSJ063I **STIME = *hh*:*mm*:*ss*:000000 (SELECT START TIME)**

Explanation

This message is issued to the console, along with message DSJ047I, messages DSJ090I to DSJ098I, messages DSJ275I to DSJ279I, and message DSJ290I. It is issued in response to either the LIST command entered at the console, or to SYSPRINT in response to the GO command issued from either the console or the parameter input file. When output is to SYSPRINT, the only messages printed are those whose default values were used, or those whose values were specified by the user and used during the processing of the trace file.

System action

Processing continues.

Operator response

None.

System programmer response

No response is necessary.

User response

Not applicable.

Problem determination

Not applicable.

Source

None.

Module

DSJCEPRT on behalf of DSJCPARM to SYSPRINT or console.

Routing code

Not applicable.

Descriptor code

Not applicable.

Automation

Not applicable.

Example

None.

DSJ064I **ETIME = *hh*:*mm*:*ss*:000000 (SELECT END TIME)**

Explanation

This message is issued to the console, along with message DSJ047I, messages DSJ090I to DSJ098I, messages DSJ275I to DSJ279I, and message DSJ290I. It is issued in response to either the LIST command entered at the console, or to SYSPRINT in response to the GO command issued from either the console or the parameter input file. When output is to SYSPRINT, the only messages printed are those whose default values were used, or those whose values were specified by the user and used during the processing of the trace file.

System action

Processing continues.

Operator response

None.

System programmer response

No response is necessary.

User response

Not applicable.

Problem determination

Not applicable.

Source

None.

Module

DSJCEPRT on behalf of DSJCPARM to SYSPRINT or console.

Routing code

Not applicable.

Descriptor code

Not applicable.

Automation

Not applicable.

Example

None.

DSJ065I **NODE = (REFLECTS USER SELECTION)**

Explanation

This message is issued to the console, along with message DSJ047I, messages DSJ090I to DSJ098I, messages DSJ275I to DSJ279I, and message DSJ290I. It is issued in response to either the LIST command entered at the console, or to SYSPRINT in response to the GO command issued from either the console or the parameter input file. When output is to SYSPRINT, the only messages printed are those whose default values were used, or those whose values were specified by the user and used during the processing of the trace file.

System action

Processing continues.

Operator response

None.

System programmer response

No response is necessary.

User response

Not applicable.

Problem determination

Not applicable.

Source

None.

Module

DSJCEPRT on behalf of DSJCPARM to SYSPRINT or console.

Routing code

Not applicable.

Descriptor code

Not applicable.

Automation

Not applicable.

Example

None.

DSJ066I **MAXSUBA = *nnn* (3, 7, 15, 31, 63, 127, 255)**

Explanation

This message is issued to the console, along with message DSJ047I, messages DSJ090I to DSJ098I, messages DSJ275I to DSJ279I, and message DSJ290I. It is issued in response to either the LIST command entered at the console, or to SYSPRINT in response to the GO command issued from either the console or the parameter input file. When output is to SYSPRINT, the only messages printed are those whose default values were used, or those whose values were specified by the user and used during the processing of the trace file.

System action

Processing continues.

Operator response

None.

System programmer response

No response is necessary.

User response

Not applicable.

Problem determination

Not applicable.

Source

None.

Module

DSJCEPRT on behalf of DSJCPARM to SYSPRINT or console.

Routing code

Not applicable.

Descriptor code

Not applicable.

Automation

Not applicable.

Example

None.

DSJ067I **SSCP = (*xxx*,*xxxxx*)**

Explanation

This message is issued to the console, along with message DSJ047I, messages DSJ090I to DSJ098I, messages DSJ275I to DSJ279I, and message DSJ290I. It is issued in response to either the LIST command entered at the console, or to SYSPRINT in response to the GO command issued from either the console or the parameter input file. When output is to SYSPRINT, the only messages printed are those whose default values were used, or those whose values were specified by the user and used during the processing of the trace file.

System action

Processing continues.

Operator response

None.

System programmer response

No response is necessary.

User response

Not applicable.

Problem determination

Not applicable.

Source

None.

Module

DSJCEPRT on behalf of DSJCPARM to SYSPRINT or console.

Routing code

Not applicable.

Descriptor code

Not applicable.

Automation

Not applicable.

Example

None.

DSJ068I CDRM = (*xxx,xxxxx*)

Explanation

This message is issued to the console, along with message DSJ047I, messages DSJ090I to DSJ098I, messages DSJ275I to DSJ279I, and message DSJ290I. It is issued in response to either the LIST command entered at the console, or to SYSPRINT in response to the GO command issued from either the console or the parameter input file. When output is to SYSPRINT, the only messages printed are those whose default values were used, or those whose values were specified by the user and used during the processing of the trace file.

System action

Processing continues.

Operator response

None.

System programmer response

No response is necessary.

User response

Not applicable.

Problem determination

Not applicable.

Source

None

Module

DSJCEPRT on behalf of DSJCPARM to SYSPRINT or console.

Routing code

Not applicable.

Descriptor code

Not applicable.

Automation

Not applicable.

Example

None.

DSJ069I LINECNT = *nnnnnnnn* (25 to 99999999)

Explanation

This message is issued to the console, along with message DSJ047I, messages DSJ090I to DSJ098I, messages DSJ275I to DSJ279I, and message DSJ290I. This message is issued in response to either an LIST command that was entered at the console, or to SYSPRINT in response to the GO command issued from either the console or the parameter input file. When output is to SYSPRINT, the only messages printed are those that use the default values, or those whose values were specified by the user and used during the processing of the trace file.

System action

Processing continues.

Operator response

None.

System programmer response

No response is necessary.

User response

Not applicable.

Problem determination

Not applicable.

Source

None

Module

DSJCEPRT on behalf of DSJCPARM to SYSPRINT or console.

Routing code

Not applicable.

Descriptor code

Not applicable.

Automation

Not applicable.

Example

None.

DSJ070I RRSUP = *x* P=PAIR N=NO Y=YES

Explanation

This message is issued to the console, along with message DSJ047I, messages DSJ090I to DSJ098I, messages DSJ275I to DSJ279I, and message DSJ290I. This message is issued in response to either an LIST command that was entered at the console, or to SYSPRINT in response to the GO command issued from either the console or the parameter input file. When output is to SYSPRINT, the only messages printed are those that use default values, or those whose values were specified by the user and used during the processing of the trace file.

System action

Processing continues.

Operator response

None.

System programmer response

No response is necessary.

User response

Not applicable.

Problem determination

Not applicable.

Source

None

Module

DSJCEPRT on behalf of DSJCPARM to SYSPRINT or console.

Routing code

Not applicable.

Descriptor code

Not applicable.

Automation

Not applicable.

Example

None.

DSJ071I TIMEOUT = *nnn* (0 to 255)

Explanation

This message is issued to the console, along with message DSJ047I, messages DSJ090I to DSJ098I, messages DSJ275I to DSJ279I, and message DSJ290I. This message is issued in response to either an LIST command that was entered at the console, or to SYSPRINT in response to the GO command issued from either the console or the parameter input file. When output is to SYSPRINT, the only messages printed are those that use default values, or those whose values were specified by the user and used during the processing of the trace file.

System action

Processing continues.

Operator response

None.

System programmer response

No response is necessary.

User response

Not applicable.

Problem determination

Not applicable.

Source

None

Module

DSJCEPRT on behalf of DSJCPARM to SYSPRINT or console.

Routing code

Not applicable.

Descriptor code

Not applicable.

Automation

Not applicable.

Example

None.

DSJ072I **UNIT = *uuuu* (TAPE DISK)**

Explanation

This message is issued to the console, along with message DSJ047I, messages DSJ090I to DSJ098I, messages DSJ275I to DSJ279I, and message DSJ290I. This message is issued in response to either the LIST command entered at the console, or to SYSPRINT in response to the GO command issued from either the console or the parameter input file. When output is to SYSPRINT, the only messages printed are those that use default values, or those whose values were specified by the user and used during the processing of the trace file.

System action

Processing continues.

Operator response

None.

System programmer response

No response is necessary.

User response

Not applicable.

Problem determination

Not applicable.

Source

None

Module

DSJCEPRT on behalf of DSJCPARM to SYSPRINT or console.

Routing code

Not applicable.

Descriptor code

Not applicable.

Automation

Not applicable.

Example

None.

DSJ073I **PRINT = *x* N=NO Y=YES (TRACE DATA TO SYSPRINT/SYSLST)**

Explanation

This message is issued to the console, along with message DSJ047I, messages DSJ090I to DSJ098I, messages DSJ275I to DSJ279I, and message DSJ290I. This message is issued in response to either an LIST command entered at the console, or to SYSPRINT in response to the GO command issued from either the console or the parameter input file. When output is to SYSPRINT, the only messages printed are those that use default values, or those

whose values were specified by the user and used during the processing of the trace file.

System action

Processing continues.

Operator response

None.

System programmer response

No response is necessary.

User response

Not applicable.

Problem determination

Not applicable.

Source

None

Module

DSJCEPRT on behalf of DSJCPARM to SYSPRINT or console.

Routing code

Not applicable.

Descriptor code

Not applicable.

Automation

Not applicable.

Example

None.

DSJ074I VTPRT = *x* Y=YES N=NO (VIT REPORT)

Explanation

This message is issued to the console, along with message DSJ047I, messages DSJ090I to DSJ098I, messages DSJ275I to DSJ279I, and message DSJ290I. This message is issued in response to either an LIST command entered at the console, or to SYSPRINT in response to the GO command issued from either the console or the parameter input file. When output is to SYSPRINT, the only messages printed are those that use default values, or those whose values were specified by the user and used during the processing of the trace file.

System action

Processing continues.

Operator response

None.

System programmer response

No response is necessary.

User response

Not applicable.

Problem determination

Not applicable.

Source

None

Module

DSJCEPRT on behalf of DSJCPARM to SYSPRINT or console.

Routing code

Not applicable.

Descriptor code

Not applicable.

Automation

Not applicable.

Example

None.

DSJ075I NCPNAME = (SELECT NCPNAME OR FIRST NAME)

Explanation

This message is issued to the console, along with message DSJ047I, messages DSJ090I to DSJ098I, messages DSJ275I to DSJ279I, and message

DSJ290I. This message is issued in response to either an LIST command entered at the console, or to SYSPRINT in response to the GO command issued from either the console or the parameter input file. When output is to SYSPRINT, the only messages printed are those that use default values, or those whose values were specified by the user and used during the processing of the trace file.

System action

Processing continues.

Operator response

None.

System programmer response

No response is necessary.

User response

Not applicable.

Problem determination

Not applicable.

Source

None

Module

DSJCEPRT on behalf of DSJCPARM to SYSPRINT or console.

Routing code

Not applicable.

Descriptor code

Not applicable.

Automation

Not applicable.

Example

None.

DSJ076I **GSPRT = *x* Y=YES N=NO (GPT SUMMARY)**

Explanation

This message is issued to the console, along with message DSJ047I, messages DSJ090I to DSJ098I, messages DSJ275I to DSJ279I, and message DSJ290I. This message is issued in response to either an LIST command entered at the console, or to SYSPRINT in response to the GO command issued from either the console or the parameter input file. When output is to SYSPRINT, the only messages printed are those that use default values, or those whose values were specified by the user and used during the processing of the trace file.

System action

Processing continues.

Operator response

None.

System programmer response

No response is necessary.

User response

Not applicable.

Problem determination

Not applicable.

Source

None

Module

DSJCEPRT on behalf of DSJCPARM to SYSPRINT or console.

Routing code

Not applicable.

Descriptor code

Not applicable.

Automation

Not applicable.

Example

None.

DSJ077I **VITTYPE = *xxxxxxxx***

Explanation

This message is issued to the console, along with message DSJ047I, messages DSJ090I to DSJ098I, messages DSJ275I to DSJ279I, and message DSJ290I. This message is issued in response to either an LIST command entered at the console, or to SYSPRINT in response to the GO command issued from either the console or the parameter input file. When output is to SYSPRINT, the only messages printed are those that use default values, or those whose values were specified by the user and used during the processing of the trace file.

System action

Processing continues.

Operator response

None.

System programmer response

No response is necessary.

User response

Not applicable.

Problem determination

Not applicable.

Source

None

Module

DSJCEPRT on behalf of DSJCPARM to SYSPRINT or console.

Routing code

Not applicable.

Descriptor code

Not applicable.

Automation

Not applicable.

Example

None.

DSJ078I **VITSTR = (c'character string'/ x'hex string')**

Explanation

This message is issued to the console, along with message DSJ047I, messages DSJ090I to DSJ098I, messages DSJ275I to DSJ279I, and message DSJ290I. This message is issued in response to either LIST command entered at the console, or to SYSPRINT in response to the GO command issued from either the console or the parameter input file. When output is to SYSPRINT, the only messages printed are those that use default values, or those whose values were specified by the user and used during the processing of the trace file.

System action

Processing continues.

Operator response

None.

System programmer response

No response is necessary.

User response

Not applicable.

Problem determination

None.

Source

None.

Module

None.

Routing code

Not applicable.

Descriptor code

Not applicable.

Automation

Not applicable.

Example

None.

DSJ079I **VNAME = (VTAM *jobname*/ASCB *address*)**

Explanation

This message is issued to the console, along with message DSJ047I, messages DSJ090I to DSJ098I, messages DSJ275I to DSJ279I, and message DSJ290I. This message is issued in response to either an LIST command entered at the console, or to SYSPRINT in response to the GO command issued from either the console or the parameter input file. When output is to SYSPRINT, the only messages printed are those that use default values, or those whose values were specified by the user and used during the processing of the trace file.

System action

Processing continues.

Operator response

None.

System programmer response

No response is necessary.

User response

Not applicable.

Problem determination

Not applicable.

Source

None

Module

DSJCEPRT on behalf of DSJCPARM to SYSPRINT or console.

Routing code

Not applicable.

Descriptor code

Not applicable.

Automation

Not applicable.

Example

None.

DSJ080I **PARAMETERS IN INPUT IN ERROR**

Explanation

If parameters are entered incorrectly, you can correct the error. This message is issued to indicate the reason why additional parameters are being requested.

System action

Processing continues and you are prompted for additional input from the console.

Operator response

None.

System programmer response

Enter additional ACF/TAP parameters or commands.

User response

None.

Problem determination

None.

Source

None.

Module

DSJCEPRT on behalf of DSJCPARM to SYSPRINT or console.

Routing code

Not applicable.

Descriptor code

Not applicable.

Automation

Not applicable.

Example

None.

DSJ081I **PROMPT COMMAND ISSUED FROM SYSIN/SYSIPT**

Explanation

The PROMPT command was issued from the parameter input file.

System action

Processing continues and you are prompted for additional input from the console.

Operator response

None.

System programmer response

Enter additional ACF/TAP parameters or commands.

User response

None.

Problem determination

None.

Source

None.

Module

DSJCEPRT on behalf of DSJCPARM to SYSPRINT or console.

Routing code

Not applicable.

Descriptor code

Not applicable.

Automation

Not applicable.

Example

None.

DSJ082I **GO COMMAND ISSUED FROM SYSIN/SYSIPT**

Explanation

The GO command was issued from the parameter input file.

System action

Parameter input stops immediately, and trace file processing begins.

Operator response

None.

System programmer response

No response is necessary.

User response

None.

Problem determination

None.

Source

None.

Module

DSJCEPRT on behalf of DSJCPARM to SYSPRINT or console.

Routing code

Not applicable.

Descriptor code

Not applicable.

Automation

Not applicable.

Example

None.

DSJ083I QUIT COMMAND ISSUED FROM SYSIN/SYSIPT

Explanation

This message informs you that the QUIT command was issued from the parameter input file.

System action

Parameter input and program execution stop immediately.

Operator response

None.

System programmer response

No response is necessary.

User response

None.

Problem determination

None.

Source

None.

Module

DSJCEPRT on behalf of DSJCPARM to SYSPRINT or console.

Routing code

Not applicable.

Descriptor code

Not applicable.

Automation

Not applicable.

Example

None.

DSJ084I LIST COMMAND FROM SYSIN/ SYSIPT IGNORED

Explanation

The LIST command was issued from the parameter input file.

System action

The LIST command from the parameter input file is ignored.

Operator response

None.

System programmer response

No response is necessary.

User response

None.

Problem determination

None.

Source

None.

Module

DSJCEPRT on behalf of DSJCPARM to SYSPRINT or console.

Routing code

Not applicable.

Descriptor code

Not applicable.

Automation

Not applicable.

Example

None.

DSJ085I READ COMMAND FROM SYSIN/ SYSIPT IGNORED

Explanation

The READ command was issued from the parameter input file.

System action

The READ command from the parameter input file is ignored.

Operator response

None.

System programmer response

No response is necessary.

User response

None.

Problem determination

None.

Source

None.

Module

DSJCEPRT on behalf of DSJCPARM to SYSPRINT or console.

Routing code

Not applicable.

Descriptor code

Not applicable.

Automation

Not applicable.

Example

None.

DSJ086I RESET COMMAND ISSUED FROM SYSIN/SYSIPT

Explanation

The RESET command was issued from the parameter input file.

System action

All ACF/TAP parameters are reset to their default values.

Operator response

None.

System programmer response

No response is necessary.

User response

None

Problem determination

None.

Source

None.

Module

DSJCEPRT on behalf of DSJCPARM to SYSPRINT or console.

Routing code

Not applicable.

Descriptor code

Not applicable.

Automation

Not applicable.

Example

None.

DSJ088I INDEX = INDEX( ) OAF/DAF( )

Explanation

This message is issued to the console, along with message DSJ047I, messages DSJ050I to DSJ079I, messages DSJ275I to DSJ279I, and message DSJ290I. It is issued in response to either the LIST command entered at the console or to SYSPRINT in response to the GO command issued from either the console or the parameter input file. When output is to SYSPRINT, the only messages printed are those whose default values were used, or those whose values were specified by the user and used during the processing of the trace file.

System action

Processing continues.

Operator response

None.

System programmer response

No response is necessary.

User response

None.

Problem determination

None.

Source

None.

Module

DSJCEPRT on behalf of DSJPARM to SYSPRINT or console.

Routing code

Not applicable.

Descriptor code

Not applicable.

Automation

Not applicable.

Example

None.

DSJ089I ***message text***

Explanation

The message text shows the current parameter value read from the parameter input file. This message is output to SYSPRINT for every parameter read from the parameter input file and is followed by DSJ028I if a syntax error is detected in the input.

System action

Processing continues.

Note: This message is output to SYSPRINT for every parameter read from the parameter input file and is followed by message DSJ028I if a syntax error is detected in the input.

Operator response

None.

System programmer response

No response is necessary.

User response

Not applicable.

Problem determination

Not applicable.

Source

None

Module

DSJCEPRT on behalf of DSJCPARM to SYSPRINT or console.

Routing code

Not applicable.

Descriptor code

Not applicable.

Automation

Not applicable.

Example

None.

DSJ090I **NTPRT = *x* Y=YES N=NO F=FRTR I=IP N=NTRI (NTRI REPORT)**

Explanation

This message is issued to the console, along with message DSJ047I, messages DSJ050I to DSJ079I, messages DSJ275I to DSJ279I, and message DSJ290I. This message is issued in response to either an LIST command entered at the console or to SYSPRINT in response to the GO command issued from either the console or the parameter input file.

When output is to SYSPRINT, the only messages printed are those that use default values, or those whose values were specified by the user and used during the processing of the trace file.

System action

Processing continues.

Operator response

None.

System programmer response

No response is necessary.

User response

None.

Problem determination

None.

Source

None.

Module

DSJCEPRT on behalf of DSJPARM to SYSPRINT or console.

Routing code

None.

Descriptor code

None.

Automation

None.

Example

None.

DSJ091I LLN = (LOGICAL LINE NUMBER)

Explanation

This message is issued to the console, along with message DSJ047I, messages DSJ050I to DSJ079I, messages DSJ275I to DSJ279I, and message DSJ290I. This message is issued in response to either an LIST command entered at the console or to SYSPRINT in response to the GO command issued from either the console or the parameter input file. When output is to SYSPRINT, the only messages printed are those that use default values, or those whose values were specified by the user and used during the processing of the trace file.

System action

Processing continues.

Operator response

None.

System programmer response

No response is necessary.

User response

None.

Problem determination

None.

Source

None.

Module

DSJCEPRT on behalf of DSJPARM to SYSPRINT or console.

Routing code

None.

Descriptor code

None.

Automation

None.

Example

None.

DSJ092I NPPRT = *x* Y=YES N=NO (X.25 REPORT)

Explanation

This message is issued to the console, along with message DSJ047I, messages DSJ050I to DSJ079I,

messages DSJ275I to DSJ279I, and message DSJ290I. This message is issued in response to either an LIST command entered at the console or to SYSPRINT in response to the GO command issued from either the console or the parameter input file. When output is to SYSPRINT, the only messages printed are those that use default values, or those whose values were specified by the user and used during the processing of the trace file.

System action

Processing continues.

Operator response

None.

System programmer response

No response is necessary.

User response

None.

Problem determination

None.

Source

None.

Module

DSJCEPRT on behalf of DSJPARM to SYSPRINT or console.

Routing code

None.

Descriptor code

None.

Automation

None.

Example

None.

DSJ093I **LCN = (LOGICAL CHANNEL NUMBER)**

Explanation

This message is issued to the console, along with message DSJ047I, messages DSJ050I to DSJ079I, messages DSJ275I to DSJ279I, and message DSJ290I. This message is issued in response to either an LIST command entered at the console or to SYSPRINT in response to the GO command issued from either the console or the parameter input file. When output is to SYSPRINT, the only messages printed are those that use default values, or those whose values were specified by the user and used during the processing of the trace file.

System action

Processing continues.

Operator response

None.

System programmer response

No response is necessary.

User response

None.

Problem determination

None.

Source

None.

Module

DSJCEPRT on behalf of DSJPARM to SYSPRINT or console.

Routing code

None.

Descriptor code

None.

Automation

None.

Example

None.

DSJ094I **IXPRT = *x* Y=YES N=NO (INDEX REPORT)**

Explanation

This message is issued to the console, along with message DSJ047I, messages DSJ050I to DSJ079I, messages DSJ275I to DSJ279I, and message DSJ290I. This message is issued in response to either an LIST command entered at the console or to SYSPRINT in response to the GO command issued from either the console or the parameter input file. When output is to SYSPRINT, the only messages printed are those that use default values, or those whose values were specified by the user and used during the processing of the trace file.

System action

Processing continues.

Operator response

None.

System programmer response

No response is necessary.

User response

None.

Problem determination

None.

Source

None.

Module

DSJCEPRT on behalf of DSJPARM to SYSPRINT or console.

Routing code

None.

Descriptor code

None.

Automation

None.

Example

None.

DSJ095I **LUPRT = *x* Y=YES N=NO (LUNAME-NETADDRESS XREF)**

Explanation

This message is issued to the console, along with message DSJ047I, messages DSJ050I to DSJ079I, messages DSJ275I to DSJ279I, and message DSJ290I. This message is issued in response to either an LIST command entered at the console or to SYSPRINT in response to the GO command issued from either the console or the parameter input file. When output is to SYSPRINT, the only messages printed are those that use default values, or those whose values were specified by the user and used during the processing of the trace file.

System action

Processing continues.

Operator response

None.

System programmer response

No response is necessary.

User response

None.

Problem determination

None.

Source

None.

Module

DSJCEPRT on behalf of DSJPARM to SYSPRINT or console.

Routing code

None.

Descriptor code

None.

Automation

None.

Example

None.

DSJ096I **LONGPIU = *x* Y=YES N=NO (MAXIMUM DATA LENGTH Y=4092 N=252)**

Explanation

This message is issued to the console, along with message DSJ047I, messages DSJ050I to DSJ079I, messages DSJ275I to DSJ279I, and message DSJ290I. This message is issued in response to either an LIST command entered at the console or to SYSPRINT in response to the GO command issued from either the console or the parameter input file. When output is to SYSPRINT, the only messages printed are those that use default values, or those whose values were specified by the user and used during the processing of the trace file.

System action

Processing continues.

Operator response

None.

System programmer response

No response is necessary.

User response

None.

Problem determination

None.

Source

None.

Module

DSJCEPRT on behalf of DSJPARM to SYSPRINT or console.

Routing code

None.

Descriptor code

None.

Automation

None.

Example

None.

DSJ097I **SDATE = *mm.dd.yy* (SELECT START DATE)**

Explanation

This message is issued to the console, along with message DSJ047I, messages DSJ050I to DSJ079I, messages DSJ275I to DSJ279I, and message DSJ290I. This message is issued in response to either an LIST command entered at the console or to SYSPRINT in response to the GO command issued from either the console or the parameter input file. When output is to SYSPRINT, the only messages printed are those that use default values were used, or those whose values were specified by the user and used during the processing of the trace file.

System action

Processing continues.

Operator response

None.

System programmer response

No response is necessary.

User response

None.

Problem determination

None.

Source

None.

Module

DSJCEPRT on behalf of DSJPARM to SYSPRINT or console.

Routing code

None.

Descriptor code

None.

Automation

None.

Example

None.

DSJ098I **EDATE = *mm.dd.yy* (SELECT END DATE)**

Explanation

This message is issued to the console, along with message DSJ047I, messages DSJ050I to DSJ079I, messages DSJ275I to DSJ279I, and message DSJ290I. This message is issued in response to either an LIST command entered at the console or to SYSPRINT in response to the GO command issued from either the console or the parameter input file. When output is to SYSPRINT, the only messages printed are those that use default values, or those whose values were specified by the user and used during the processing of the trace file.

System action

Processing continues.

Operator response

None.

System programmer response

No response is necessary.

User response

None.

Problem determination

None.

Source

None.

Module

DSJCEPRT on behalf of DSJPARM to SYSPRINT or console.

Routing code

None.

Descriptor code

None.

Automation

None.

Example

None.

DSJ099I **ACFTAP TERMINATES**

Explanation

This message is issued as the last action to occur when the main routine (DSJCETAP) has completely executed.

System action

Processing continues.

Operator response

None.

System programmer response

No response is necessary.

User response

None.

Problem determination

None.

Source

None.

Module

DSJCEPRT on behalf of DSJCETAP to console.

Routing code

None.

Descriptor code

None.

Automation

None.

Example

None.

DSJ100I **MESSAGE *xxxxxxx* ACFTAP INTERNAL ERROR CODE: *yyyyyyyy* RET: *zzzzzzzz***

Explanation

An undefined error code (*yyyyyyyy* in decimal) was supplied to the network error print routine. *xxxxxxx* is the message number that is assigned by ACF/TAP, and *zzzzzzzz* is the return code in hexadecimal format.

System action

Processing continues.

Operator response

None.

System programmer response

No response is necessary.

User response

None.

Problem determination

None.

Source

None.

Module

DSJYEMIT on behalf of "unknown" to SYSPRINT and SYSNEPRT.

Routing code

None.

Descriptor code

None.

Automation

None.

Example

None.

DSJ101I **MESSAGE *xxxxxxx* INCOMPLETE BASIC LINK UNIT**

Explanation

Insufficient data remains in the current trace entry to permit processing of the SDLC frame (address, control and BCC) bytes. *xxxxxxx* is the message number that is assigned by ACF/TAP.

System action

No further processing is performed on the message.

Operator response

None.

System programmer response

Examine the trace data to determine the cause of the error condition.

User response

None.

Problem determination

None.

Source

None.

Module

DSJYEMIT on behalf of DSJRSDLC to SYSPRINT and SYSNEPRT.

Routing code

None.

Descriptor code

None.

Automation

None.

Example

None.

DSJ102I **This message number can have one of three messages. See explanation for the possible messages.**

Explanation

One of the following messages is displayed for this message number:

- MESSAGE/ELEMENT *xxxxxxx* SDLC REJ - FRAME REJECT
- MESSAGE *xxxxxxx* SDLC REJ - FRAME REJECT
  - Line trace for type 1 or 2 scanner.
- ELEMENT *xxxxxxx* SDLC REJ - FRAME REJECT
  - Line trace for type 3 scanner.

The occurrence of the SDLC reject command (REJ) is noted. The value *xxxxxxx* is the message or element number that is assigned by ACF/TAP.

System action

No further processing is performed on the message.

Operator response

None.

System programmer response

Examine the trace data to determine the cause of the error condition.

User response

None.

Problem determination

None.

Source

None.

Module

DSJYEMIT on behalf of DSJRASCM to SYSPRINT and SYSNEPRT.

Routing code

None.

Descriptor code

None.

Automation

None.

Example

None.

DSJ104I **This message number can have one of three messages. See explanation for the possible messages.**

Explanation

One of the following messages appears for this message number:

- MESSAGE/ELEMENT *xxxxxxx* SDLC CMDR - COMMAND REJECT
- MESSAGE *xxxxxxx* SDLC CMDR - COMMAND REJECT
  - Line trace for type 1 or 2 scanner.
- ELEMENT *xxxxxxx* SDLC CMDR - COMMAND REJECT
  - Line trace for type 3 scanner.

The occurrence of the SDLC command reject (CMDR) is noted. *xxxxxxx* is the ACF/TAP-assigned message number of the trace entry currently being processed.

System action

No further processing is performed on the message.

Operator response

None.

System programmer response

Examine the trace data to determine the cause of the error condition.

User response

None.

Problem determination

None.

Source

None.

Module

DSJYEMIT on behalf of DSJRASCM to SYSPRINT and SYSNEPRT.

Routing code

None.

Descriptor code

None.

Automation

None.

Example

None.

DSJ105I	**This message number can have one of three messages. See explanation for the possible messages.**

Explanation

One of the following messages is displayed for this message number:

- MESSAGE/ELEMENT *xxxxxxx* INVALID SDLC SUPERVISORY FRAME
- MESSAGE *xxxxxxx* INVALID SDLC SUPERVISORY FRAME
  - Line trace for type 1 or 2 scanner.
- ELEMENT *xxxxxxx* INVALID SDLC SUPERVISORY FRAME
  - Line trace for type 3 scanner.

The SDLC supervisory frame command is not defined. The value *xxxxxxx* is the message or element number that is assigned by ACF/TAP.

System action

No further processing is performed on the message.

Operator response

None.

System programmer response

Examine the trace data to determine the cause of the error condition.

For form 2 messages, see the type 3 scanner status element in “Line trace summary report (LSPRT)” on page 25 or “Line trace detail report (LDPRT)” on page 25.

User response

None.

Problem determination

None.

Source

None.

Module

DSJYEMIT on behalf of DSJRASCM to SYSPRINT and SYSNEPRT.

Routing code

None.

Descriptor code

None.

Automation

None.

Example

None.

DSJ106I	**This message number can have one of three messages. See explanation for the possible messages.**

Explanation

One of the following messages is displayed for this message number:

- MESSAGE *xxxxxxx* INVALID SDLC NONSEQUENCED FRAME
- MESSAGE *xxxxxxx* INVALID SDLC NONSEQUENCED FRAME
  - Line trace for type 1 or 2 scanner.

- ELEMENT *xxxxxxx* INVALID SDLC NONSEQUENCED FRAME
  - Line trace for type 3 scanner.

The SDLC nonsequenced frame command is not valid. The value *xxxxxxx* is the message or element number that is assigned by ACF/TAP.

System action

No further processing is performed on the message.

Operator response

None.

System programmer response

Examine the trace data to determine the cause of the error condition.

User response

None.

Problem determination

None.

Source

None.

Module

DSJYEMIT on behalf of DSJRASCM to SYSPRINT and SYSNEPRT.

Routing code

None.

Descriptor code

None.

Automation

None.

Example

None.

DSJ110I MESSAGE *xxxxxxx* INCOMPLETE TRANSMISSION HEADER

Explanation

Insufficient data remains in the current trace entry to permit processing of the transmission header. The value *xxxxxxx* is the message number (that is assigned by ACF/TAP) of the trace entry currently being processed.

System action

No further processing is performed on the message.

Operator response

None.

System programmer response

Examine the trace data to determine the cause of the error condition.

User response

None.

Problem determination

None.

Source

None.

Module

DSJYEMIT on behalf of DSJRANTH to SYSPRINT and SYSNEPRT.

Routing code

None.

Descriptor code

None.

Automation

None.

Example

None.

DSJ111I MESSAGE *xxxxxxx* INVALID TRANSMISSION HEADER FIELD

Explanation

The transmission header format identifier is not 0, 1, 2, 3, or 4. The value *xxxxxxx* is the message number assigned by ACF/TAP.

System action

No further processing is performed on the message.

Operator response

None.

System programmer response

Trace data should be examined to determine the cause of the error condition.

See *System Network Architecture - Network Products Formats* LY43-0081 for more information.

User response

None.

Problem determination

None.

Source

None.

Module

DSJYEMIT on behalf of DSJRANTH to SYSPRINT and SYSNEPRT.

Routing code

None.

Descriptor code

None.

Automation

None.

Example

None.

DSJ112I **ELEMENT *xxxxxxx* TRUNCATED NTRI ENTRY TYPE**

Explanation

ACF/TAP detected a truncated entry type in the NTRI line trace element being processed. The value *xxxxxxx* is the element number (that is assigned by ACF/TAP) of the trace entry being processed.

System action

No further processing is performed on the element.

Operator response

None.

System programmer response

Trace data should be examined to determine the cause of the error condition.

User response

None.

Problem determination

None.

Source

None.

Module

DSJYEMIT on behalf of DSJNTITR to SYSPRINT and SYSNEPRT.

Routing code

None.

Descriptor code

None.

Automation

None.

Example

None.

DSJ113I **ELEMENT *xxxxxxx* TRUNCATED NTRI FRAME**

Explanation

In the NTRI line trace element that is being processed, ACF/TAP detected a truncated LLC frame. The value *xxxxxxx* is the ACF/TAP-assigned element number of the trace entry that is being processed.

System action

No further processing is performed on the element.

Operator response

None.

System programmer response

Examine the trace data to determine the cause of the error condition.

User response

None.

Problem determination

None.

Source

None.

Module

DSJYEMIT on behalf of DSJNTITR to SYSPRINT and SYSNEPRT.

Routing code

None.

Descriptor code

None.

Automation

None.

Example

None.

DSJ114I **ELEMENT *xxxxxxx* LLC REJECT**

Explanation

In the NTRI line trace element that is being processed, ACF/TAP detected an LLC frame reject. The value *xxxxxxx* is the ACF/TAP-assigned element number of the trace entry that is being processed.

System action

Processing continues.

Operator response

None.

System programmer response

Examine the trace data should to determine the cause of the error condition.

User response

None.

Problem determination

None.

Source

None.

Module

DSJYEMIT on behalf of DSJLNCTL to SYSNEPRT.

Routing code

None.

Descriptor code

None.

Automation

None.

Example

None.

DSJ115I **ELEMENT *xxxxxxx* INVALID LLC NONSEQUENCED FRAME**

Explanation

In the NTRI line trace element being processed, ACF/TAP detected an LLC nonsequenced frame that was not valid. The value *xxxxxxx* is the element number of the trace entry being processed. This value is assigned by ACF/TAP.

System action

No further processing is performed on the element.

Operator response

None.

System programmer response

Trace data should be examined to determine the cause of the error condition.

User response

Not applicable.

Problem determination

Not applicable.

Source

None.

Module

DSJYEMIT on behalf of DSJLNCTL to SYSNEPRT.

Routing code

Not applicable.

Descriptor code

Not applicable.

Automation

Not applicable.

Example

None.

DSJ116I **ELEMENT *xxxxxxx* LLC CMDR - COMMAND REJECT**

Explanation

In the NTRI line trace element being processed, ACF/TAP detected an LLC command reject. The value *xxxxxxx* is the element number of the trace entry being processed. This value is assigned by ACF/TAP.

System action

Processing continues.

Operator response

None.

System programmer response

Trace data should be examined to determine the cause of the error condition.

User response

Not applicable.

Problem determination

Not applicable.

Source

None.

Module

DSJYEMIT on behalf of DSJLCTL to SYSNEPRT.

Routing code

Not applicable.

Descriptor code

Not applicable.

Automation

Not applicable.

Example

None.

DSJ117I **ELEMENT *xxxxxxx* PACKET CMDR - COMMAND REJECT**

Explanation

In the X.25 packet header being processed, ACF/TAP detected a packet command reject. The value *xxxxxxx* is the element number of the trace entry being processed. This value is assigned by ACF/TAP.

System action

Processing continues.

Operator response

None.

System programmer response

Trace data should be examined to determine the cause of the error condition.

User response

Not applicable.

Problem determination

Not applicable.

Source

None.

Module

DSJYEMIT on behalf of DSJLNCTL to SYSPRINT and SYSNEPRT.

Routing code

Not applicable.

Descriptor code

Not applicable.

Automation

Not applicable.

Example

None.

DSJ118I ELEMENT *xxxxxxx* INVALID LLC SUPERVISORY FRAME

Explanation

In the NTRI line trace element being processed, ACF/TAP detected an LLC supervisory frame that is not valid. The value *xxxxxxx* is the element number of the trace entry being processed. This value is assigned by ACF/TAP.

System action

No further processing is performed on the element.

Operator response

None.

System programmer response

Trace data should be examined to determine the cause of the error condition.

User response

Not applicable.

Problem determination

Not applicable.

Source

None.

Module

DSJYEMIT on behalf of DSJLNCTL to SYSNEPRT.

Routing code

Not applicable.

Descriptor code

Not applicable.

Automation

Not applicable.

Example

None.

DSJ119I ELEMENT *xxxxxxx* INVALID PACKET HEADER COMMAND

Explanation

In the X.25 packet header being processed, ACF/TAP detected a packet header command that is not valid. The value *xxxxxxx* is the element number of the trace entry being processed. This value is assigned by ACF/TAP.

System action

No further processing is performed on the element.

Operator response

None.

System programmer response

Trace data should be examined to determine the cause of the error condition.

User response

Not applicable.

Problem determination

Not applicable.

Source

None.

Module

DSJYEMIT on behalf of DSJLNCTL to SYSPRINT and SYSNEPRT.

Routing code

Not applicable.

Descriptor code

Not applicable.

Automation

Not applicable.

Example

None.

DSJ120I **MESSAGE *xxxxxxx* INCOMPLETE REQUEST HEADER**

Explanation

Insufficient data remains in the current trace entry to permit processing of the request header (RH). The ACF/TAP-assigned sequence number is *xxxxxxx*.

System action

No further processing is performed on the message.

Operator response

None.

System programmer response

Examine the trace data to determine the cause of the error condition.

User response

Not applicable.

Problem determination

Not applicable.

Source

None.

Module

DSJYEMIT on behalf of DSJRANRH to SYSPRINT and SYSNEPRT.

Routing code

Not applicable.

Descriptor code

Not applicable.

Automation

Not applicable.

Example

None.

DSJ121I **MESSAGE *xxxxxxx* INVALID REQUEST HEADER FIELD**

Explanation

No check is made of the reserved or restricted bits in the request header.

System action

Processing continues.

Operator response

None.

System programmer response

No response is necessary.

User response

Not applicable.

Problem determination

Not applicable.

Source

None.

Module

DSJYEMIT on behalf of DSJRANRH to SYSPRINT and SYSNEPRT.

Routing code

Not applicable.

Descriptor code

Not applicable.

Automation

Not applicable.

Example

None.

DSJ122I **MESSAGE *xxxxxxx* INCOMPLETE NETWORK CONTROL/SC/DFC COMMAND**

Explanation

Insufficient data remains in the current trace entry to permit processing of the session control, network control, or data flow control (DFC) command byte. The value *xxxxxxx* is the ACF/TAP-assigned message number of the trace entry that is currently being processed.

System action

No further processing is performed on the message.

Operator response

None.

System programmer response

Examine the trace data to determine the cause of the error condition.

User response

Not applicable.

Problem determination

Not applicable.

Source

None.

Module

DSJYEMIT on behalf of DSJRANRU to SYSPRINT and SYSNEPRT.

Routing code

Not applicable.

Descriptor code

Not applicable.

Automation

Not applicable.

Example

None.

DSJ123I **MESSAGE *xxxxxxx* INCOMPLETE NETWORK SERVICES RESPONSE UNIT**

Explanation

Insufficient data remains in the current trace entry to permit processing of the header bytes of the network services formatted FM data to or from an SSCP or CDRM. The value *xxxxxxx* is the element number of the trace entry being processed. This value is assigned by ACF/TAP.

System action

No further processing is performed on the message.

Operator response

None.

System programmer response

Examine the trace data to determine the cause of the error condition.

User response

Not applicable.

Problem determination

Not applicable.

Source

None.

Module

DSJYEMIT on behalf of DSJRANRU to SYSPRINT and SYSNEPRT.

Routing code

Not applicable.

Descriptor code

Not applicable.

Automation

Not applicable.

Example

None.

DSJ124I **MESSAGE *xxxxxxx* UNDEFINED SESSION CONTROL/NETWORK CONTROL/DFC COMMAND**

Explanation

The session control, network control, or data flow control (DFC) command is not defined to DSJCETAP. The value *xxxxxxx* is the element number of the trace entry being processed. This value is assigned by ACF/TAP.

System action

No further processing is performed on the message.

Operator response

None.

System programmer response

See *System Network Architecture - Network Products Formats* LY43-0081 for more information.

User response

Not applicable.

Problem determination

Not applicable.

Source

None.

Module

DSJYEMIT on behalf of DSJRANRU to SYSPRINT and SYSNEPRT.

Routing code

Not applicable.

Descriptor code

Not applicable.

Automation

Not applicable.

Example

None.

DSJ125I **MESSAGE *xxxxxxx* UNDEFINED NETWORK SERVICES COMMAND**

Explanation

The network services command is not defined in DSJCETAP. The value *xxxxxxx* is the ACF/TAP-assigned message number of the trace entry that is currently being processed.

System action

No further processing is performed on the message.

Operator response

None.

System programmer response

See *System Network Architecture - Network Products Formats* LY43-0081 for more information.

User response

Not applicable.

Problem determination

Not applicable.

Source

None.

Module

DSJYEMIT on behalf of DSJRANRU to SYSPRINT and SYSNEPRT.

Routing code

Not applicable.

Descriptor code

Not applicable.

Automation

Not applicable.

Example

None.

DSJ126I **MESSAGE *xxxxxxx* SENSE DATA FIELD PRESENT *ssssssssseeee....eeee***

Explanation

The presence of channel sense data (*ssssssss*) in the trace entry is noted. The value *xxxxxxx* is the element number of the trace entry being processed. This value is assigned by ACF/TAP. The value *eeee* is the English translation of the sense code.

System action

Processing of the trace entry continues.

Operator response

None.

System programmer response

Examine the trace data to determine the cause of the error condition. See *NCP and EP Reference Summary and Data Areas, Volume 2* for information about channel sense data.

User response

Not applicable.

Problem determination

Not applicable.

Source

None.

Module

DSJYEMIT on behalf of DSJRSENS to SYSPRINT and SYSNEPRT.

Routing code

Not applicable.

Descriptor code

Not applicable.

Automation

Not applicable.

Example

None.

DSJ127I **MESSAGE *xxxxxxx* INVALID OAF/DAF ADDRESS**

Explanation

A formatted function management (FM) data path information unit (PIU) contained an OAF/DAF address for subarea 0 with a nonzero element address. The value *xxxxxxx* is the element number of the trace entry being processed. This value is assigned by ACF/TAP.

System action

Processing of the trace data continues.

Operator response

None.

System programmer response

Verify that the correct MAXSUBA parameter has been specified, because making an incorrect specification or allowing the default can cause this message to be issued. See *System Network Architecture - Network Products Formats* LY43-0081 for more information.

User response

Not applicable.

Problem determination

Not applicable.

Source

None.

Module

DSJYEMIT on behalf of DSJRANRU to SYSPRINT and SYSNEPRT.

Routing code

Not applicable.

Descriptor code

Not applicable.

Automation

Not applicable.

Example

None.

DSJ128I **MESSAGE *xxxxxxx* INCOMPLETE SENSE DATA FIELD**

Explanation

Insufficient data remains in the current trace entry to permit processing of the sense data bytes. The value *xxxxxxx* is the element number of the trace entry being processed. This value is assigned by ACF/TAP.

System action

No further processing is performed on the message.

Operator response

None.

System programmer response

Examine the trace data to determine the cause of the error condition.

User response

Not applicable.

Problem determination

Not applicable.

Source

None.

Module

DSJYEMIT on behalf of DSJRANRH to SYSPRINT and SYSNEPRT.

Routing code

Not applicable.

Descriptor code

Not applicable.

Automation

Not applicable.

Example

None.

DSJ129I **MESSAGE *xxxxxxx* UNDEFINED SENSE DATA FIELD**

Explanation

The sense bytes are not defined to DSJCETAP. The value *xxxxxxx* is the element number of the trace entry being processed. This value is assigned by ACF/TAP.

System action

No further processing is performed on the message.

Operator response

None.

System programmer response

See *System Network Architecture - Network Products Formats* LY43-0081 for more information.

User response

Not applicable.

Problem determination

Not applicable.

Source

None.

Module

DSJYEMIT on behalf of DSJRSENS to SYSPRINT and SYSNEPRT.

Routing code

Not applicable.

Descriptor code

Not applicable.

Automation

Not applicable.

Example

None.

DSJ130I MESSAGE *xxxxxxx* INCOMPLETE FID0 BTU CMD/MODIFIER

Explanation

Insufficient data remains in the current trace entry to permit processing of the FID0 basic transmission unit (BTU) bytes. The value *xxxxxxx* is the element number of the trace entry being processed. This value is assigned by ACF/TAP. This message appears only if the SNA detail report is run.

System action

No further processing is performed on the message.

Operator response

None.

System programmer response

Examine the trace data to determine the cause of the error condition. See *System Network Architecture - Network Products Formats* LY43-0081 for more information.

User response

Not applicable.

Problem determination

Not applicable.

Source

None.

Module

DSJYEMIT on behalf of DSJRANRH to SYSPRINT and SYSNEPRT.

Routing code

Not applicable.

Descriptor code

Not applicable.

Automation

Not applicable.

Example

None.

DSJ131I MESSAGE *xxxxxxx* INVALID FID0 BTU CMD/MODIFIER

Explanation

The basic transmission unit command or response is not defined to DSJCETAP. The value *xxxxxxx* is the element number of the trace entry being processed. This value is assigned by ACF/TAP. This message appears only if the SNA detail report is run.

System action

No further processing is performed on the message.

Operator response

None.

System programmer response

Examine the trace data to determine the cause of the error condition. See *System Network Architecture - Network Products Formats* LY43-0081 for more information.

User response

Not applicable.

Problem determination

Not applicable.

Source

None.

Module

DSJYEMIT on behalf of DSJRANRH to SYSPRINT and SYSNEPRT.

Routing code

Not applicable.

Descriptor code

Not applicable.

Automation

Not applicable.

Example

None.

DSJ140I **MESSAGE *xxxxxxx* NETWORK SERVICES PROCEDURE ERROR**

Explanation

The occurrence of the NSPE network services request unit is noted.

System action

Processing of the trace data continues.

Operator response

None.

System programmer response

Examine the trace data to determine the cause of the error condition. See *System Network Architecture - Network Products Formats* LY43-0081 for more information.

User response

Not applicable.

Problem determination

Not applicable.

Source

None.

Module

DSJYEMIT on behalf of DSJRANRH to SYSPRINT and SYSNEPRT.

Routing code

Not applicable.

Descriptor code

Not applicable.

Automation

Not applicable.

Example

None.

DSJ141I **MESSAGE *xxxxxxx* BIND FAILURE**

Explanation

The occurrence of the BINDF network services request unit is noted. The value *xxxxxxx* is the ACF/TAP-assigned message number of the trace entry that is currently being processed.

System action

Processing of the trace data continues.

Operator response

None.

System programmer response

Examine the trace data to determine the cause of the error condition. See *System Network Architecture - Network Products Formats* LY43-0081 for more information.

User response

Not applicable.

Problem determination

Not applicable.

Source

None.

Module

DSJYEMIT on behalf of DSJRAFMH to SYSPRINT and SYSNEPRT.

Routing code

Not applicable.

Descriptor code

Not applicable.

Automation

Not applicable.

Example

None.

DSJ142I **MESSAGE *xxxxxxx* UNBIND FAILURE**

Explanation

The occurrence of the UNBINDF network services request unit is noted.

System action

Processing of the trace data continues.

Operator response

None.

System programmer response

Examine the trace data to determine the cause of the error condition. See *System Network Architecture - Network Products Formats* LY43-0081 for more information.

User response

Not applicable.

Problem determination

Not applicable.

Source

None.

Module

DSJYEMIT on behalf of DSJRAFMH to SYSPRINT and SYSNEPRT.

Routing code

Not applicable.

Descriptor code

Not applicable.

Automation

Not applicable.

Example

None.

DSJ143I **MESSAGE *xxxxxxx* INOPERATIVE**

Explanation

The occurrence of the INOP network services request is noted. The value *xxxxxxx* is the ACF/TAP-assigned message number of the trace entry that is currently being processed.

System action

Processing of the trace data continues.

Operator response

None.

System programmer response

Examine the trace data to determine the cause of the error condition. See *System Network Architecture - Network Products Formats* LY43-0081 for more information.

User response

Not applicable.

Problem determination

Not applicable.

Source

None.

Module

DSJYEMIT on behalf of DSJRANRH to SYSPRINT and SYSNEPRT.

Routing code

Not applicable.

Descriptor code

Not applicable.

Automation

Not applicable.

Example

None.

DSJ144I MESSAGE *xxxxxxx* LOST PATH

Explanation

The occurrence of the LOSTPATH network control command is noted.

System action

Processing of the trace data continues.

Operator response

None.

System programmer response

Examine the trace data to determine the cause of the error condition. See *System Network Architecture - Network Products Formats* LY43-0081 for more information.

User response

Not applicable.

Problem determination

Not applicable.

Source

None.

Module

DSJYEMIT on behalf of DSJRANRU to SYSPRINT and SYSNEPRT.

Routing code

Not applicable.

Descriptor code

Not applicable.

Automation

Not applicable.

Example

None.

DSJ145I MESSAGE *xxxxxxx* LOST SUBAREA

Explanation

The occurrence of the lost subarea network control command is noted.

System action

Processing of the trace data continues.

Operator response

None.

System programmer response

Examine the trace data to determine the cause of the error condition. See *System Network Architecture - Network Products Formats* LY43-0081 for more information.

User response

Not applicable.

Problem determination

Not applicable.

Source

None.

Module

DSJYEMIT on behalf of DSJRANRH to SYSPRINT and SYSNEPRT.

Routing code

Not applicable.

Descriptor code

Not applicable.

Automation

Not applicable.

Example

None.

DSJ146I MESSAGE *xxxxxxx* REQUEST RECOVERY (RQR)

Explanation

The occurrence of the RQR session control command is noted. The value *xxxxxxx* is the ACF/TAP-assigned message number of the trace entry that is currently being processed.

System action

Processing of the trace data continues.

Operator response

None.

System programmer response

Examine the trace data to determine the cause of the error condition. See *System Network Architecture - Network Products Formats* LY43-0081 for more information.

User response

Not applicable.

Problem determination

Not applicable.

Source

None.

Module

DSJYEMIT on behalf of DSJRANRH to SYSPRINT and SYSNEPRT.

Routing code

Not applicable.

Descriptor code

Not applicable.

Automation

Not applicable.

Example

None.

DSJ147I MESSAGE *xxxxxxx* X-DOMAIN SESSION SETUP FAILURE

Explanation

The occurrence of the CDSESSF network services request unit is noted. The value *xxxxxxx* is the ACF/TAP-assigned message number of the trace entry that is currently being processed.

System action

Processing of the trace data continues.

Operator response

None.

System programmer response

Examine the trace data to determine the cause of the error condition. See *System Network Architecture - Network Products Formats* LY43-0081 for more information.

User response

Not applicable.

Problem determination

Not applicable.

Source

None.

Module

DSJYEMIT on behalf of DSJRAFMH to SYSPRINT and SYSNEPRT.

Routing code

Not applicable.

Descriptor code

Not applicable.

Automation

Not applicable.

Example

None.

DSJ148I MESSAGE *xxxxxxx* X-DOMAIN SESSION TAKEDOWN FAIL

Explanation

The occurrence of the CDSESSTF network services request unit is noted. The value *xxxxxxx* is the ACF/TAP-assigned message number of the trace entry that is currently being processed.

System action

Processing of the trace data continues.

Operator response

None.

System programmer response

Examine the trace data to determine the cause of the error condition. See *System Network Architecture - Network Products Formats* LY43-0081 for more information.

User response

Not applicable.

Problem determination

Not applicable.

Source

None.

Module

DSJYEMIT on behalf of DSJRAFMH to SYSPRINT and SYSNEPRT.

Routing code

Not applicable.

Descriptor code

Not applicable.

Automation

Not applicable.

Example

None.

DSJ149I MESSAGE *xxxxxxx* NETWORK MANAGEMENT VECTOR TRANSPORT

Explanation

The occurrence of a network management vector transport RU is noted. The value *xxxxxxx* is the ACF/TAP-assigned message number of the trace entry that is currently being processed. The major vector key is examined and the type of NMVT is identified on the different reports.

System action

Processing of the trace data continues.

Operator response

None.

System programmer response

Examine the NMVT for further information. See *System Network Architecture - Network Products Formats* LY43-0081 for more information.

User response

Not applicable.

Problem determination

Not applicable.

Source

None.

Module

DSJYEMIT on behalf of DSJRAFMH to SYSPRINT and SYSNEPRT.

Routing code

Not applicable.

Descriptor code

Not applicable.

Automation

Not applicable.

Example

None.

DSJ199I	MESSAGE *xxxxxxx* TRACE DATA MAY BE DISCONTINUOUS

Explanation

A continuity error condition was detected in the input data. This message reflects the continuity error to the analysis portion of ACF/TAP.

Note: This message prints with message DSJ230I and one of the following messages:

- DSJ241I
- DSJ242I
- DSJ243I
- DSJ244I
- DSJ245I
- DSJ248I
- DSJ249I

System action

ACF/TAP internal buffers are reset to avoid merging unrelated pieces of data. Suppression of receive ready (RR) pairs in SDLC line trace is reset.

Operator response

None.

System programmer response

When analyzing trace data, be aware of the continuity situation.

User response

Not applicable.

Problem determination

Not applicable.

Source

None.

Module

DSJYEMIT on behalf of DSJRDRVR to SYSPRINT and SYSNEPRT.

Routing code

Not applicable.

Descriptor code

Not applicable.

Automation

Not applicable.

Example

None.

DSJ201I	GTF RECORD *nnnnnnn* LENG(*lllll*) D(*mm:dd:yy*) T(*hh:mm:ss:dddddd*) AID(*aa*) FID(*ff*) EID(*eeee*) *tttttttttttt*

Explanation

This message describes the contents of the GTF header portion of GTF trace records. Table 11 on page 126 lists the variable fields in the message text and what it means.

Table 11. Contents of the GTF header portion of GTF trace records

Variable	Meaning
nnnnnnn	ACF/TAP-assigned input record number
lllll	Input record length
mm:*dd*:*yy*	Time-stamp date field from the input record or from the last GTF time-stamp control record
hh:*mm*:*ss*	Time-stamp time field from the input record or from the last GTF time-stamp control record
aa	GTF AID (action identifier) field
ff	GTF FID (format identifier) field
eeee	GTF EID (event identifier) field
tttttttt	Literal describing recognized records: (VTAM BUFFER, USER BUFFER, and NCP TRACE, NETCTLR TRACE, or VIT TRACE)

In certain situations, the contents of the GTF trace record headers, with non-VTAM GTF trace records, can be valuable in problem determination.

System action

Processing continues.

Operator response

None.

System programmer response

Information about GTF can be found in z/OS MVS Diagnosis: Tools and Service Aids.

User response

Not applicable.

Problem determination

Not applicable.

Source

None.

Module

DSJCEPRT on behalf of DSJTDRVR to SYSPRINT.

Routing code

Not applicable.

Descriptor code

Not applicable.

Automation

Not applicable.

Example

None.

DSJ202I **DOS BLOCK *nnnnnnn* LENG(*lllll*) LRC(*vvvvv*) ID(*iiiii*) SEQ(*sssss*) COUNT(*ccccc*)**

Explanation

This message describes the contents of the DOS/VTAM trace block header. Table 12 on page 127 lists the variable fields in the message text and what it means.

Table 12. Contents of the DOS/VTAM trace block header

Variable	Meaning
nnnnnnn	ACF/TAP-assigned input record number
lllll	Block length from the block header
vvvvv	Lost trace block count
iiiii	Trace block identifier, normally "TRACE"
sssss	Trace block sequence number
ccccc	Count of the VTAM trace records in the trace block

System action

Processing continues.

Operator response

None.

System programmer response

You can find detailed information about the DOS/VTAM trace file contents in z/OS Communications Server: SNA Network Implementation Guide.

User response

Not applicable.

Problem determination

Not applicable.

Source

None.

Module

DSJCEPRT on behalf of DSJTDRVR to SYSPRINT.

Routing code

Not applicable.

Descriptor code

Not applicable.

Automation

Not applicable.

Example

None.

DSJ203I **This message number can have one of three messages. See explanation for the possible messages.**

Explanation

One of the following messages is displayed for this message number:

- VTAM TRACE *nnnnnnn* LENG(*lllll*) D(*mm:dd:yy*) T(*hh:mm:ss:dddddd*) LRC(*ii/oo*) *ttttttttttt* dir *eeeeeee* S(*nnnnnnnn.sssssssss*) D(*aaaaaaaa.ddddddddd*)
- VTAM TRACE *nnnnnnn* LENG(*lllll*) D(*mm:dd:yy*) T(*hh:mm:ss:dddddd*) LRC(*ii/oo*) *ttttttttttt* dir *eeeeeee* S(*nnnnnnnn.sssssssss*) D(*aaaaaaaa.ddddddddd*) SEGMENT(*ggggggggg*)
- VTAM TRACE *nnnnnnn* LENG(*lllll*) D(*mm:dd:yy*) T(*hh:mm:ss:dddddd*) *ttttttttttt* dir *eeeeeee* IP ORIGIN(*o.oo.oo.ooo*) IP DESTINATION(*i.ii.ii.iii*) ORIGIN PORT(*ppppp*) DESTINATION PORT(*rrrrr*)

These messages describe the content of the VTAM record header.

Table 13 on page 128 lists the variable fields in the message text and what it means.

Table 13. DSJ203I variables and meanings

Variable	Meaning
nnnnnnn	ACF/TAP-assigned VTAM record number
lllll	VTAM record length from the VTAM record header
mm:*dd*:*yy*	Converted time-stamp date field from the trace record header
hh:*mm*:*ss*:	Converted time-of-day time-stamp time field from the trace record header
ii	Hexadecimal inbound lost record count from the trace record header
oo	Hexadecimal outbound lost record count from the trace record header
ttttttttt	Literal describing records (VTAM IO, VTAM PBUFFER, USER BUFFER, USER PBUFFER, USER FBUFFER, VTAM FBUFFER, SNIP TRACE and NCP TRACE) that can be processed
dir	Trace direction with respect to the host access method
eeeeeee	Next element count to be assigned by ACF/TAP to a line trace element.

Table 13. DSJ203I variables and meanings (continued)

Variable	Meaning
nnnnnnnn	sNetwork source address and source NODENAME, or line name of the line being traced
aaaaaaaa	dNetwork destination address and destination NODENAME. (Blank if line trace.)
o.oo.oo.o	oRemote Internet (IP) address
i.ii.ii.i	iLocal Internet (IP) address
ppppp	Local port number
rrrrr	Remote port number
ggggggggg	Shows the full buffer trace status as either COMPLETE, FIRST, MIDDLE, or LAST. If the segment is FIRST, MIDDLE, or LAST, then the sequence number is also given.

System action

Processing continues.

Operator response

None.

System programmer response

Information about VTAM trace file contents can be found in the appropriate VTAM installation manual.

User response

Not applicable.

Problem determination

Not applicable.

Source

None.

Module

DSJCEPRT on behalf of DSJTDRVR to SYSPRINT.

Routing code

Not applicable.

Descriptor code

Not applicable.

Automation

Not applicable.

Example

None.

DSJ204I **This message number can have one of two messages. See Explanation for the possible messages.**

Explanation

One of the following messages is displayed for this message number:

- LINE TRACE *nnnnnnn* TYPE(*tt*) LINE(*llll*) *dddd* DUPLEX *bbbbb*]*sssssssss*[*llllllll* TIME(*mm*) EP(*ee*) STATUS(*ss*) *wwwwwwww eeeeeee*
  - Trace Type: Line trace header.
- GPIU TRACE *nnnnnnn* TYPE(tt) NCPADDR(*aaaa*) STATUS(*ss*)
  - Trace Type: Generalized PIU trace header.

Both of these messages describe the contents of the record trace header information returned by NCP to the host access method as part of the line trace or generalized PIU trace data. Table 14 on page 129 lists the variable fields in the message text and what it means.

Table 14. DSJ204I variables and meanings

Variable	Meaning
nnnnnnn	ACF/TAP-assigned VTAM record number
tt	RU1WT byte returned as part of the record line trace or generalized PIU trace header
llll	Hexadecimal format network address of the line that is being traced
.dddd	HALF or FULL duplex
bbbbb	CSB-3 if the line trace is being performed on a line attached to a type 3 scanner
sssssssss	• SECONDARY, PRIMARY, LIM, or COUPLER. • SECONDARY or PRIMARY, depending on whether the link is traced as the secondary or primary SDLC station.

Table 14. DSJ204I variables and meanings (continued)

Variable	Meaning
	• LIM or COUPLER, CSS trace point indication for the link level trace (LLT).
llllllll	TRANSMIT or RECEIVE if the line is a duplex line, otherwise, blank. This field indicates which leg of the link (inbound or outbound) is represented by the trace data.
mm	RU1TH (25.5 second timer) returned as part of the record line trace header
ee	RU1SCA byte returned as part of the record line trace header
ss	RU1RTT byte returned as part of the record line trace or generalized PIU trace header
wwwwwwww	SLOWDOWN if the slowdown indicator is on in the record line trace header
eeeeeee	Next element count to be assigned by ACF/TAP to a line trace element
aaaa	Address of NCP

System action

Processing continues.

Operator response

None.

System programmer response

Information about DOS/VTAM trace file contents can be found in z/OS Communications Server: SNA Network Implementation Guide.

User response

Not applicable.

Problem determination

Not applicable.

Source

None.

Module

DSJCEPRT on behalf of DSJTDRVR to SYSPRINT.

Routing code

Not applicable.

Descriptor code

Not applicable.

Automation

Not applicable.

Example

None.

DSJ206I **RECORD *nnnnnnn* ELEMENT *eeeeeee* LINK(*llll*) CLUSTER(*cccc*) RESOURCE(*rrrr*) RESOURCE TYPE(*tttttttttttt*) STATUS DATA(*ss*)**

Explanation

This message explains the contents of the generalized PIU trace entry.

Table 15 on page 130 lists the variable fields in the message text and what it means.

Table 15. PIU trace entry message text meanings

Variable	Meaning
nnnnnnn	ACF/TAP-assigned input record number
eeeeeee	Element number (within the record)
llll	Link address
cccc	Cluster address
rrrr	tResource address
tttttttt	Resource type
ss	Status byte

Interpret the GPT status byte as shown in Table 16 on page 130.

Table 16. GPT status byte meanings

Bit	Meaning
Bit 0 on	GPT was started or stopped for all resources on the specified link.
Bit 1 on	GPT was started for the given resources.
Bit 2 on	GPT was stopped for the given resources.
Bit 3 on	Data was lost because GPT tried to trace a resource whose address was unresolved.

Table 16. GPT status byte meanings (continued)

Bit	Meaning
Bit 4 on	Data was lost because the virtual route for the SSCP-NCP session that GPT flowed on became inoperative.
Bit 5 on	The resource for which this status record was generated is dynamically reallocatable.

System action

Processing continues.

Operator response

None.

System programmer response

No response is necessary.

User response

Not applicable.

Problem determination

Not applicable.

Source

None.

Module

DSJCEPRT on behalf of DSJTDRVR to SYSPRINT.

Routing code

Not applicable.

Descriptor code

Not applicable.

Automation

Not applicable.

Example

None.

DSJ207I **RECORD *nnnnnnn* ELEMENT *eeeeeee* OSAF-OEF *oooooooo-ffff* DSAF-DEF *dddddddd-gggg***

PCID *pppppppppppppppp* CPNAME *cccccccccccccccccc*

Explanation

This message explains the contents of the generalized PIU trace entry.

Table 17 on page 131 lists the variable fields in the message text and what it means.

Table 17. DSJ207I message text variable field meaning

Variable	Meaning
nnnnnnn	ACF/TAP-assigned input record number
eeeeeee	Element number (within the record)
ooooooo	Origination subarea address field
ffff	Origination element field
ddddddd	Destination subarea address field
gggg	Destination element field
pppppppp	Procedure-correlation identifier
cccccccc	Fully qualified CP name

System action

Processing continues.

Messages DSJ220I to DSJ229I describe the state of the GTF trace file as determined by the bit settings in the first time-stamp control record encountered in the file.

Operator response

None.

System programmer response

No response is necessary.

User response

Not applicable.

Problem determination

Not applicable.

Source

None.

Module

DSJCEPRT on behalf of DSJGPTTR to SYSPRINT.

Routing code

Not applicable.

Descriptor code

Not applicable.

Automation

Not applicable.

Example

None.

DSJ208I **GTF RECORD *nnnnnnn* CONSISTS OF *aaaaaa* SEGMENT OF VTAM RECORD *ooooooo* WITH (*xxxxx*) BYTES OF (*yyyyy*) TOTAL**

Explanation

The contents of the VTAM record from the GTF record header are provided.

Table 18 on page 131 lists the variable fields in the message text and what it means.

Table 18. GTF record header variable fields text meaning

Variable	Meaning
nnnnnnn	GTF record count
aaaaaa	FIRST, MIDDLE, or LAST
ooooooo	VTAM record count
xxxxx	GTF record length
yyyyy	The value in the GTF Total Length field.

System action

Processing continues.

Operator response

None.

System programmer response

Information about GTF can be found in z/OS MVS Diagnosis: Tools and Service Aids.

User response

Not applicable.

Problem determination

Not applicable.

Source

None.

Module

DSJCEPRT on behalf of DSJCGBLK to SYSPRINT.

Routing code

Not applicable.

Descriptor code

Not applicable.

Automation

Not applicable.

Example

None.

DSJ209I **APPN HEADER RECORD *rrrrrrr* LENG (*lllllllll*) D (*mm.dd.yyyy*) T (*hh.mm.ss*)**

Explanation

This message describes the following fields of the 3746 Model 950 trace header.

Table 19 on page 132 lists the variable fields in the message text and what it means.

Table 19. 3746 Model 950 trace header variable fields text meaning

Variable	Meaning
rrrrrrr	APPN header record number. This number gets incremented for new APPN headers only.
lllllllll	Trace record length. The trace record can be up to 6 KB long, not including the 176-byte header.
mm.dd.yyyy	Date: month.day.year
hh.mm.ss	Time: hours.minutes.seconds

System action

Processing continues.

Operator response

None.

System programmer response

For information about the 3746 Model 950 trace file contents, see the 3746 Model 950 trace formats in Chapter 4, “ACF/TAP parameters,” on page 21.

User response

Not applicable.

Problem determination

Not applicable.

Source

None.

Module

DSJCABLK

Routing code

Not applicable.

Descriptor code

Not applicable.

Automation

Not applicable.

Example

None.

DSJ210I **APPN RECORD *eeeeeee* LENG (*ggggg*) UNIT ADDR (*uuuuuuuu*) LINE ADDR (*aaaa*)**

Explanation

This message describes the following fields of the 3746 Model 950 trace header.

Table 20. 3746 Model 950 trace header variable fields text meaning

Variable	Meaning
eeeeeee	APPN trace record number
ggggg	Trace record length, usually 176 bytes
uuuuuuuu	Unit address
aaaa	Lines address

System action

Processing continues.

Operator response

None.

System programmer response

For information about the 3746 Model 950 trace file contents, see the 3746 Model 950 trace formats in Chapter 4, “ACF/TAP parameters,” on page 21.

User response

Not applicable.

Problem determination

Not applicable.

Source

None.

Module

DSJCABLK

Routing code

Not applicable.

Descriptor code

Not applicable.

Automation

Not applicable.

Example

None.

DSJ211I **STOP CAUSE (*cc*) PROCESSOR NAME (*pppppppp pppppppp pppppppp pppppppp*)**

Explanation

This message describes the following fields of the 3746 Model 950 trace header.

Table 21. 3746 Model 950 trace header variable fields text meaning

Variable	Meaning
cc	Stop cause
pppppppp pppppppp pppppppp pppppppp	Processor name

System action

Processing continues.

Operator response

None.

System programmer response

For information about the 3746 Model 950 trace file contents, see the 3746 Model 950 trace formats in Chapter 4, “ACF/TAP parameters,” on page 21.

User response

Not applicable.

Problem determination

Not applicable.

Source

None.

Module

DSJCABLK

Routing code

Not applicable.

Descriptor code

Not applicable.

Automation

Not applicable.

Example

None.

DSJ212I **(*xxxxxxxx xxxxxxx....*)**

Explanation

This message describes the following fields of the 3746 Model 950 trace header.

Table 22. 3746 Model 950 trace header variable fields text meaning

Variable	Meaning
xxxxxxxx xxxxxxxx ..	1 - 128 bytes of comments

System action

Processing continues.

Operator response

None.

User response

Not applicable.

For information about the 3746 Model 950 trace file contents, see the 3746 Model 950 trace formats in Chapter 4, “ACF/TAP parameters,” on page 21.

Problem determination

Not applicable.

Source

None.

Module

DSJCABLK

Routing code

Not applicable.

Descriptor code

Not applicable.

Automation

Not applicable.

Example

None.

DSJ213I **APPN RECORD *rrrrrr* LEN (*lllll*) FULL DUPLEX CSA 950 APPN TRACE**

Explanation

This message describes the contents of the 3746 Model 950 trace record and appears with each 176 bytes of data.

Table 23. 3746 Model 950 trace header variable fields text meaning

Variable	Meaning
rrrrr	APPN trace record number
lllll	Length of each APPN data record

System action

Processing continues.

Operator response

None.

System programmer response

For information about the 3746 Model 950 trace file contents, see the 3746 Model 950 trace formats in Chapter 4, “ACF/TAP parameters,” on page 21.

User response

Not applicable.

Problem determination

Not applicable.

Source

None.

Module

DSJCABLK

Routing code

Not applicable.

Descriptor code

Not applicable.

Automation

Not applicable.

Example

None.

DSJ220I **TRACE FILE RECORDED BY MVS GTF**

Explanation

The trace file was recorded by MVS GTF.

```
AID(00)  FID(04)    VS1  (SVS/VS1)
```

```
AID(00)  FID(01)    VS2  (MVS/VS2)
```

System action

Processing continues.

Operator response

None.

System programmer response

No response is necessary.

User response

Not applicable.

Problem determination

Not applicable.

Source

None.

Module

DSJCEPRT on behalf of DSJCGBLK to SYSPRINT or console.

Routing code

Not applicable.

Descriptor code

Not applicable.

Automation

Not applicable.

Example

None.

DSJ222I **GTF MINIMAL TRACE RECORDING MODE**

Explanation

The first time-stamp record encountered caused the GTF trace recording mode to be set to minimal. The recording mode can be set to minimal or comprehensive.

System action

Processing continues.

Operator response

None.

System programmer response

No response is necessary.

User response

Not applicable.

Problem determination

Not applicable.

Source

None.

Module

DSJCEPRT on behalf of DSJCGBLK to SYSPRINT or console.

Routing code

Not applicable.

Descriptor code

Not applicable.

Automation

Not applicable.

Example

None.

DSJ223I **GTF COMPREHENSIVE TRACE RECORDING MODE**

Explanation

The first time-stamp record encountered caused the GTF trace recording mode to be set to comprehensive. The recording mode can be set to minimal or comprehensive. DSJCETAP does not print the JOBNAME or address space identifier, which is included in GTF trace records in comprehensive recording mode.

System action

Processing continues.

Operator response

None.

System programmer response

No response is necessary.

User response

Not applicable.

Problem determination

Not applicable.

Source

None.

Module

DSJCEPRT on behalf of DSJCGBLK to SYSPRINT or console.

Routing code

Not applicable.

Descriptor code

Not applicable.

Automation

Not applicable.

Example

None.

DSJ224I **GTF TRACE RECORDS ARE TIMESTAMPED**

Explanation

The first time-stamp record encountered caused the GTF time/notice time-stamp option to be set to time stamp individual GTF trace records. If individual records are time stamped, they are shown as having the same time that GTF recorded the record.

System action

Processing continues.

Operator response

None.

System programmer response

No response is necessary.

User response

Not applicable.

Problem determination

Not applicable.

Source

None.

Module

DSJCEPRT on behalf of DSJCGBLK to SYSPRINT or console.

Routing code

Not applicable.

Descriptor code

Not applicable.

Automation

Not applicable.

Example

None.

DSJ225I GTF TRACE RECORDS ARE NOT TIMESTAMPED

Explanation

The first time-stamp record encountered caused the GTF time/notice time-stamp option to be set to not time stamp individual GTF trace records. If individual trace records are not time stamped, they are shown as having the same time as the last time-stamp control record.

System action

Processing continues.

Operator response

None.

System programmer response

No response is necessary.

User response

Not applicable.

Problem determination

Not applicable.

Source

None.

Module

DSJCEPRT on behalf of DSJCGBLK to SYSPRINT or console.

Routing code

Not applicable.

Descriptor code

Not applicable.

Automation

Not applicable.

Example

None.

DSJ227I GTF RNIO OPTION NEEDED FOR VTAM TRACE TYPE=RNIO

Explanation

The first time-stamp record encountered caused the GTF RNIO option to be turned off.

System action

Processing continues.

Operator response

None.

System programmer response

No response is necessary.

User response

Not applicable.

Problem determination

Not applicable.

Source

None.

Module

DSJCEPRT on behalf of DSJCGBLK to SYSPRINT or console.

Routing code

Not applicable.

Descriptor code

Not applicable.

Automation

Not applicable.

Example

None.

DSJ228I GTF USR OPTION IN EFFECT

Explanation

The first time-stamp record encountered caused the GTF USR option to be set. Detailed information about GTF can be found in the service aids manual for your operating system.

System action

Processing continues.

Operator response

None.

System programmer response

No response is necessary.

User response

Not applicable.

Problem determination

Not applicable.

Source

None.

Module

DSJCEPRT on behalf of DSJCGBLK to SYSPRINT or console.

Routing code

Not applicable.

Descriptor code

Not applicable.

Automation

Not applicable.

Example

None.

DSJ229I GTF USR OPTION NEEDED FOR VTAM TRACE TYPE=LINE AND TYPE=BUF

Explanation

The first time-stamp record encountered caused the GTF USR option to be turned off. Detailed information about GTF can be found in the service aids manual for your operating system.

System action

Processing continues.

Operator response

None.

System programmer response

No response is necessary.

User response

Not applicable.

Problem determination

Not applicable.

Source

None.

Module

DSJCEPRT on behalf of DSJCGBLK to SYSPRINT or console.

Routing code

Not applicable.

Descriptor code

Not applicable.

Automation

Not applicable.

Example

None.

DSJ230I TRACE BUFFERS RESET DUE TO CONTINUITY ERROR

Explanation

Trace buffers are reinitialized to prevent erroneous analysis of trace data.

System action

Processing of the trace record continues.

Operator response

None.

System programmer response

No response is necessary.

User response

Not applicable.

Problem determination

Not applicable.

Source

None.

Module

DSJCEPRT on behalf of DSJTRGET to SYSPRINT or console.

Note: This message also prints with message DSJ199I and one of the following messages: DSJ241I, DSJ242I, DSJ243I, DSJ244I, DSJ245I, DSJ248I, or DSJ249I.

Routing code

Not applicable.

Descriptor code

Not applicable.

Automation

Not applicable.

Example

None.

DSJ231I INPUT ERROR ON TRACE FILE

Explanation

ACF/TAP information preceded by message DSJ008I is sent as output to the system log by means of the WTL macro.

System action

The input trace record is skipped. Processing continues with the next trace record.

Operator response

None.

System programmer response

See DSJ007I and DSJ008I.

User response

Not applicable.

Problem determination

Not applicable.

Source

None.

Module

DSJCEPRT on behalf of DSJTRGET to SYSPRINT.

Routing code

Not applicable.

Descriptor code

Not applicable.

Automation

Not applicable.

Example

None.

DSJ233I **NO SESSION/CONVERSATION INDEX DATA TO SORT**

Explanation

No trace records marking parallel sessions or conversations were found in the GPT trace data.

System action

ACF/TAP ends normally.

Operator response

None.

System programmer response

Start GPT on the appropriate logical unit before the session is started so that the parallel session or conversation-unique data or both can be captured.

User response

Not applicable.

Problem determination

Not applicable.

Source

None.

Module

DSJCEPRT on behalf of DSJGSORT to SYSPRINT.

Routing code

Not applicable.

Descriptor code

Not applicable.

Automation

Not applicable.

Example

None.

DSJ234I **CMS FILE ERROR (*xxx*) READING SORT IN**

Explanation

A CMS file system error occurred while reading an ACF/TAP work file. The CMS file system error code is *xxx*.

System action

ACF/TAP ends.

Operator response

None.

System programmer response

Use the CMS file system error code to determine the cause of the error.

User response

Not applicable.

Problem determination

Not applicable.

Source

None.

Module

DSJCEPRT on behalf of DSJGSORT or DSJLSORT to SYSPRINT.

Routing code

Not applicable.

Descriptor code

Not applicable.

Automation

Not applicable.

Example

None.

DSJ235I **SORTIN AND SORTOUT HAVE IDENTICAL FILEIDS**

Explanation

The user-supplied FILEDEFS for SORTIN and SORTOUT specify the same FILEID. The sort program that ACF/TAP uses cannot sort a file in place.

System action

ACF/TAP ends.

Operator response

None.

System programmer response

Change SORTIN and SORTOUT FILEDEFS so they specify different FILEIDS.

User response

Not applicable.

Problem determination

Not applicable.

Source

None.

Module

DSJCEPRT on behalf of DSJGSORT or DSJLSORT to SYSPRINT.

Routing code

Not applicable.

Descriptor code

Not applicable.

Automation

Not applicable.

Example

None.

DSJ236I CMS FILE ERROR (*xxx*) WRITING SORTOUT

Explanation

A CMS file system error occurred while writing an ACF/TAP work file. The CMS file system error code is *xxx*.

System action

ACF/TAP ends.

Operator response

None.

System programmer response

Use the CMS file system error code to determine the cause of the error.

User response

Not applicable.

Problem determination

Not applicable.

Source

None.

Module

DSJCEPRT on behalf of DSJGSORT or DSJLSORT to SYSPRINT.

Routing code

Not applicable.

Descriptor code

Not applicable.

Automation

Not applicable.

Example

None.

DSJ237I CMS GETMAIN FOR (*xxxxxxxx*) BYTES FAILED

Explanation

A GETMAIN for *xxxxxxxx* bytes of storage failed

System action

ACF/TAP ends.

Operator response

None.

System programmer response

Either increase your virtual storage to allow for the successful operation of the GETMAIN, or limit the amount of GPT data to be formatted by using the SDATE, EDATE, STIME, ETIME selection parameters.

User response

Not applicable.

Problem determination

Not applicable.

Source

None.

Module

DSJCEPRT on behalf of DSJGSORT or DSJLSORT to SYSPRINT.

Routing code

Not applicable.

Descriptor code

Not applicable.

Automation

Not applicable.

Example

None.

DSJ238I NUMBER OF PROCESSABLE PARALLEL SESSIONS EXCEEDED

Explanation

ACF/TAP can process only a limited number of parallel sessions during each run.

System action

Processing of the trace file continues.

Operator response

None.

System programmer response

Use the SDATE, EDATE, STIME, and ETIME parameters to limit the amount of GPT data formatted.

User response

Not applicable.

Problem determination

Not applicable.

Source

None.

Module

DSJCEPRT on behalf of DSJINDEX to SYSPRINT.

Routing code

Not applicable.

Descriptor code

Not applicable.

Automation

Not applicable.

Example

None.

DSJ239I PCID'S COULD NOT BE DETERMINED FOR ONE (OR MORE) FMH5(S)

Explanation

ACF/TAP could not determine the sessions on which the subsequent FMH5 allocates flowed. This message can be accompanied by message DSJ238I on the SYSPRINT report.

System action

Processing of GPT session data continues.

Operator response

None.

System programmer response

If message DSJ238I appears on the SYSPRINT report, see the Programmer Response in DSJ238I. If message DSJ238I does not appear, there is no corrective action that can be taken.

User response

Not applicable.

Problem determination

Not applicable.

Source

None.

Module

DSJGSORT to SYSIXPRT, and DSJCEPRT on behalf of DSJGSORT to SYSPRINT.

Routing code

Not applicable.

Descriptor code

Not applicable.

Automation

Not applicable.

Example

None.

DSJ240I RECORD *xxxxxxx* IGNORED VS1(SVS) / VS2 GTF INDETERMINATE

Explanation

GTF records cannot be processed until ACF/TAP determines if the trace file was recorded by VS1-GTF or VS2-GTF. The determination is made by searching the file for time-stamp control records that are system unique. All trace records are ignored until a time-stamp control record is found. The value *xxxxxxx* is the record number of the current input record assigned by ACF/TAP.

System action

Processing of the trace file continues.

Operator response

None.

System programmer response

No response is necessary.

User response

Not applicable.

Problem determination

Not applicable.

Source

None.

Module

DSJCEPRT on behalf of DSJCGBLK to SYSPRINT.

Routing code

Not applicable.

Descriptor code

Not applicable.

Automation

Not applicable.

Example

None.

DSJ241I RECORD *xxxxxxx* CONTINUITY ERROR - LOST RECORD INDICATOR

Explanation

One of the following has occurred:

- A GTF lost-event record was encountered in the input file.
- A nonzero lost-event record indicator was encountered in a DOS VTAM trace block header.
- A nonzero inbound or outbound lost-record indicator was encountered in a VTAM trace record header.

This message prints with message DSJ199I, see DSJ199I. Also see DSJ230I.

System action

Processing of the trace record continues.

Operator response

None.

System programmer response

No response is necessary.

User response

Not applicable.

Problem determination

Not applicable.

Source

None.

Module

DSJCEPRT on behalf of DSJCDBLK, DSJCGBLK, or DSJCVBLK to SYSPRINT.

Routing code

Not applicable.

Descriptor code

Not applicable.

Automation

Not applicable.

Example

None.

DSJ242I RECORD *xxxxxxx* CONTINUITY ERROR - TIMESTAMP WRAPAROUND

Explanation

The time-stamp in the current GTF or VTAM trace record header contains a time value that is earlier than a previously encountered time. The value *xxxxxxx* is the record number of the current input record. This value is assigned by ACF/TAP.

This message prints with messages DSJ199I and DSJ230I.

System action

Processing of the trace record continues.

Operator response

None.

System programmer response

No response is necessary.

User response

Not applicable.

Problem determination

Not applicable.

Source

None.

Module

DSJCEPRT on behalf of DSJCDBLK, DSJCGBLK, or DSJCTBLK to SYSPRINT.

Routing code

Not applicable.

Descriptor code

Not applicable.

Automation

Not applicable.

Example

None.

DSJ243I RECORD *xxxxxxx* CONTINUITY ERROR - SEQUENCE NUMBER WRAPAROUND

Explanation

The sequence number in the current DOS/VTAM trace record header contains a sequence value that occurs earlier than a previously encountered sequence. The value *xxxxxxx* is the record number of the current input record. This value is assigned by ACF/TAP.

This message prints with messages DSJ199I and DSJ230I.

System action

Processing of the trace record continues.

Operator response

None.

System programmer response

No response is necessary.

User response

Not applicable.

Problem determination

Not applicable.

Source

None.

Module

DSJCEPRT on behalf of DSJCDBLK, or DSJCTBLK to SYSPRINT.

Routing code

Not applicable.

Descriptor code

Not applicable.

Automation

Not applicable.

Example

None.

DSJ244I **RECORD *xxxxxxx* CONTINUITY ERROR - LOST SEQUENCE NUMBER**

Explanation

The sequence number in the current DOS/VTAM trace record header contains a sequence value that is not 1 greater than the previous sequence number. The value *xxxxxxx* is the record number of the current input record. This value is assigned by ACF/TAP.

This message prints with messages DSJ199I and DSJ230I.

System action

Processing of the trace record continues.

Operator response

None.

System programmer response

No response is necessary.

User response

Not applicable.

Problem determination

Not applicable.

Source

None.

Module

DSJCEPRT on behalf of DSJCDBLK or DSJCTBLK to SYSPRINT.

Routing code

Not applicable.

Descriptor code

Not applicable.

Automation

Not applicable.

Example

None.

DSJ245I **RECORD *xxxxxxx* CONTINUITY ERROR - DATA TRUNCATED**

Explanation

Line trace data has been truncated at the end of a COMWRITE trace segment. The value *xxxxxxx* is the record number of the current input record. This value is assigned by ACF/TAP.

This message prints with messages DSJ199I and DSJ230I.

System action

Processing of the trace record continues.

Operator response

None.

System programmer response

No response is necessary.

User response

Not applicable.

Problem determination

Not applicable.

Source

None.

Module

DSJCEPRT on behalf of DSJCTBLK to SYSPRINT.

Routing code

Not applicable.

Descriptor code

Not applicable.

Automation

Not applicable.

Example

None.

DSJ246I RECORD *xxxxxxx* SUPPRESSED - CONFIDENTIAL/ENCRYPTED TEXT INDICATED

Explanation

The VTAM trace header indicates that confidential or encrypted text is included. The value *xxxxxxx* is the record number of the current input record. This value is assigned by ACF/TAP.

System action

Trace data in the trace record is blanked. No trace data is analyzed.

Operator response

None.

System programmer response

No response is necessary.

User response

Not applicable.

Problem determination

Not applicable.

Source

None.

Module

DSJCEPRT on behalf of DSJCVBLK to SYSPRINT.

Routing code

Not applicable.

Descriptor code

Not applicable.

Automation

Not applicable.

Example

None.

DSJ247I RECORD *xxxxxxx* REMAINING DATA IGNORED - LINE TRACE DATA ERROR

Explanation

The input line trace data is incorrectly formed. The last line trace element in the trace record is incomplete, or it extends beyond the remaining record length.

System action

Processing continues with the next trace record.

Operator response

None.

System programmer response

Examine the input data to determine the cause of the error condition.

User response

Not applicable.

Problem determination

Not applicable.

Source

None.

Module

DSJCEPRT on behalf of DSJLDRVR or DSJTLGET to SYSPRINT.

Routing code

Not applicable.

Descriptor code

Not applicable.

Automation

Not applicable.

Example

None.

DSJ248I RECORD *xxxxxxx* CONTINUITY - LINE TRACE TERMINATED

Explanation

The last-record indicator was on in the record line trace header returned by the NCP with line trace data. The value *xxxxxxx* is the sequence number of the current input record. This value is assigned by ACF/TAP. The last record indicator is set when a DEACTIVATE TRACE has been received. Therefore, it is normal for ACF/TAP to issue this message for the last record or records of a trace data set.

System action

Processing of the trace record continues.

Operator response

None.

System programmer response

No response is necessary.

User response

Not applicable.

Problem determination

Not applicable.

Source

None.

Module

DSJCEPRT on behalf of DSJCLNTR to SYSPRINT.

Routing code

Not applicable.

Descriptor code

Not applicable.

Automation

Not applicable.

Example

None.

DSJ249I RECORD *xxxxxxx* CONTINUITY - LINE TRACE TERMINATED (SLOWDOWN or HARDWARE ERROR)

Explanation

The last-record indicator was set in the record line trace header returned by the NCP with line trace data. The NCP line trace stopped immediately because of NCP slowdown or a hardware error. The value *xxxxxxx* is the record number of the current input record. This value is assigned by ACF/TAP.

System action

Processing of the trace record continues.

This message prints with messages DSJ199I and DSJ230I.

Operator response

None.

System programmer response

No response is necessary.

User response

Not applicable.

Problem determination

Not applicable.

Source

None.

Module

DSJCEPRT on behalf of DSJCLNTR to SYSPRINT.

Routing code

Not applicable.

Descriptor code

Not applicable.

Automation

Not applicable.

Example

None.

DSJ250I REMAINING DATA LENGTH CANNOT CONTAIN HEADER

Explanation

The input record was too short to contain a complete VTAM trace header.

System action

The record is ignored, and trace file processing continues.

Operator response

None.

System programmer response

No response is necessary.

User response

Not applicable.

Problem determination

Not applicable.

Source

None.

Module

DSJCEPRT on behalf of DSJCVBLK to SYSPRINT.

Routing code

Not applicable.

Descriptor code

Not applicable.

Automation

Not applicable.

Example

None.

DSJ251I RECORD *xxxxxxx* - GTF AND VTAM TRACE HEADERS INCONGRUENT

Explanation

The type or direction flags in the VTAM trace record header did not correspond to the equivalent flags in the GTF trace record header. The value *xxxxxxx* is the record number of the current input record that is assigned by ACF/TAP.

System action

Processing of the trace record continues. The VTAM flags take precedence over the GTF flags.

Operator response

None.

System programmer response

No response is necessary.

User response

Not applicable.

Problem determination

Not applicable.

Source

None.

Module

DSJCEPRT on behalf of DSJCVBLK to SYSPRINT.

Routing code

Not applicable.

Descriptor code

Not applicable.

Automation

Not applicable.

Example

None.

DSJ252I **RECORD *xxxxxxx* REMAINING DATA SUPPRESSED - CONFIDENTIAL/ENCRYPTED TEXT INDICATED**

Explanation

The VTAM trace header indicates confidential or encrypted text is included. The value *xxxxxxx* is the record number of the current input record. This value is assigned by ACF/TAP.

System action

Confidential or encrypted trace data in the trace record is blanked. Only header information is analyzed. No trace data is analyzed.

Operator response

None.

System programmer response

No response is necessary.

User response

Not applicable.

Problem determination

Not applicable.

Source

None.

Module

DSJCEPRT on behalf of DSJCVBLK to SYSPRINT.

Routing code

Not applicable.

Descriptor code

Not applicable.

Automation

Not applicable.

Example

None.

DSJ253I **RECORD *xxxxxxx* IGNORED - TOO SHORT TO CONTAIN BLOCK HEADER**

Explanation

The input record is not large enough to contain a complete TCAM trace block header. The value *xxxxxxx* is the record number of the current input record. This value is assigned by ACF/TAP.

System action

The trace record is ignored.

Operator response

None.

System programmer response

No response is necessary.

User response

Not applicable.

Problem determination

Not applicable.

Source

None.

Module

DSJCEPRT on behalf of DSJCTBLK to SYSPRINT.

Routing code

Not applicable.

Descriptor code

Not applicable.

Automation

Not applicable.

Example

None.

DSJ257I **RECORD *xxxxxxx* - SEQUENCE NUMBER UNCHANGED**

Explanation

The sequence number in the current DOS/VTAM trace record header contains a sequence value that is equal to the previous sequence number. The value *xxxxxxx* is the record number of the current sequence number that is assigned by ACF/TAP.

System action

Processing of the record continues.

Operator response

None.

System programmer response

No response is necessary.

User response

Not applicable.

Problem determination

Not applicable.

Source

None.

Module

DSJCEPRT on behalf of DSJCTBLK to SYSPRINT.

Routing code

Not applicable.

Descriptor code

Not applicable.

Automation

Not applicable.

Example

None.

DSJ258I **RECORD xxxxxxx IGNORED - BLOCK IDENTIFIER NOT TRACE**

Explanation

The block identifier in the DOS VTAM trace block header is not TRACE. The value *xxxxxxx* is the record number of the current input record. This value is assigned by ACF/TAP.

System action

The trace block is ignored.

Operator response

None.

System programmer response

No response is necessary.

User response

Not applicable.

Problem determination

Not applicable.

Source

None.

Module

DSJCEPRT on behalf of DSJCDBLK to SYSPRINT.

Routing code

Not applicable.

Descriptor code

Not applicable.

Automation

Not applicable.

Example

None.

DSJ260I **RECORD *xxxxxxx* LENGTH ERROR - LAST PIU ENTRY NOT 32 BYTES**

Explanation

The last PIU-trace entry in the TCAM PIU trace segment is not 32 bytes in length. The value *xxxxxxx* is the record number of the current input record. This value is assigned by ACF/TAP.

System action

The remainder of the record is ignored.

Operator response

None.

System programmer response

Examine the remaining data in the trace block to make sure that it does not contain useful trace information.

User response

Not applicable.

Problem determination

Not applicable.

Source

None.

Module

DSJCEPRT on behalf of DSJCTBLK to SYSPRINT.

Routing code

Not applicable.

Descriptor code

Not applicable.

Automation

Not applicable.

Example

None.

DSJ261I **RECORD *xxxxxxx* LENGTH ERROR - INCOMPLETE LINE TRACE HEADER**

Explanation

The line trace data remaining after record header processing is too short to contain a complete RLTRU header. The value *xxxxxxx* is the record number of the current input record. This value is assigned by ACF/TAP.

System action

The line trace entry is ignored.

Operator response

None.

System programmer response

No response is necessary.

User response

Not applicable.

Problem determination

Not applicable.

Source

None.

Module

DSJCEPRT on behalf of DSJCLNTR to SYSPRINT.

Routing code

Not applicable.

Descriptor code

Not applicable.

Automation

Not applicable.

Example

None.

DSJ262I **RECORD *xxxxxxx* IGNORED - LINE TRACE NOT INDICATED IN HEADER**

Explanation

The status byte of the record line trace header returned by NCP with line trace data did not indicate line trace. The value *xxxxxxx* is the record number of the current input record. This value is assigned by ACF/TAP.

System action

The trace record is ignored.

Operator response

None.

System programmer response

No response is necessary.

User response

Not applicable.

Problem determination

Not applicable.

Source

None.

Module

DSJCEPRT on behalf of DSJCLNTR to SYSPRINT.

Routing code

Not applicable.

Descriptor code

Not applicable.

Automation

Not applicable.

Example

None.

DSJ263I **RECORD *xxxxxxx* IGNORED - TOO SHORT TO CONTAIN LENGTH FIELD**

Explanation

Insufficient data remains in the TCAM trace record to contain a line trace entry length field. The value *xxxxxxx* is the record number of the current input record. This value is assigned by ACF/TAP.

System action

The trace record is ignored.

Operator response

None.

System programmer response

No response is necessary.

User response

Not applicable.

Problem determination

Not applicable.

Source

None.

Module

DSJCEPRT on behalf of DSJCTBLK to SYSPRINT.

Routing code

Not applicable.

Descriptor code

Not applicable.

Automation

Not applicable.

Example

None.

DSJ264I RECORD *xxxxxxx* IGNORED - LINE TRACE STATUS LENGTH ERROR

Explanation

The line trace element was detected as status but was found to be not valid. The length of the status element is not divisible by 8. The value *xxxxxxx* is the record number of the current input record. This value is assigned by ACF/TAP.

System action

The trace record is ignored.

Operator response

None.

System programmer response

No response is necessary.

User response

Not applicable.

Problem determination

Not applicable.

Source

None.

Module

DSJCEPRT on behalf of DSJLPNQL to SYSPRINT.

Routing code

Not applicable.

Descriptor code

Not applicable.

Automation

Not applicable.

Example

None.

DSJ265I RECORD *xxxxxxxx* IGNORED - CONTINUITY ERROR DUE TO SPANNED RECORD

Explanation

The current record that ACF/TAP is processing (record *xxxxxxxx*) should not be a spanned record. However, the spanned record indicator in the VTAM header is on, indicating a spanned record. Because ACF/TAP has no information about the previous records, the spanned record must be ignored to prevent erroneous results.

System action

ACF/TAP ignores the record and continues processing.

Operator response

None.

System programmer response

When analyzing the trace data, be aware that the data is not continuous.

User response

Not applicable.

Problem determination

Not applicable.

Source

None.

Module

DSJCEPRT on behalf of DSJCHMTR to SYSPRINT or SYSLIST.

Routing code

Not applicable.

Descriptor code

Not applicable.

Automation

Not applicable.

Example

None.

DSJ266I **RECORD *xxxxxxxx* RECTRD ENDED - aaa HARDWARE ERROR FOR A *xxx***

Explanation

This is the last record in the trace data because of a CSP or CSS hardware error for a SIT or TIC trace.

System action

Processing continues.

Operator response

None.

System programmer response

Notify your IBM representative for assistance.

User response

Not applicable.

Problem determination

Not applicable.

Source

None.

Module

DSJCEPRT on behalf of DSJCLNTR to SYSPRINT.

Routing code

Not applicable.

Descriptor code

Not applicable.

Automation

Not applicable.

Example

None.

DSJ267I **RECORD *xxxxxxxx* RECTRD ENDED - aaa RESOURCE UNAVAILABLE FOR A *xxx***

Explanation

This is the last record in the SIT or TIC trace data because a CSP or CSS resource is unavailable.

System action

Processing continues.

Operator response

None.

System programmer response

Notify your IBM representative for assistance.

User response

Not applicable.

Problem determination

Not applicable.

Source

None.

Module

DSJCEPRT on behalf of DSJCLNTR to SYSPRINT.

Routing code

Not applicable.

Descriptor code

Not applicable.

Automation

Not applicable.

Example

None.

DSJ271I **ELEMENT *xxxxxxx* IGNORED - INVALID LINE TRACE ELEMENT identifier**

Explanation

The element identifier on the line trace is not valid.

System action

Processing continues.

Operator response

None.

System programmer response

Examine the trace data to determine the cause of the error.

User response

Not applicable.

Problem determination

Not applicable.

Source

None.

Module

DSJCEPRT on behalf of DSJLNCSP to SYSPRINT.

Routing code

Not applicable.

Descriptor code

Not applicable.

Automation

Not applicable.

Example

None.

DSJ273I **Message *xxxxxxx* INVALID MESSAGE LENGTH OF ZERO**

Explanation

A program other than ACF/TAP has sent a record with a length element of zero. This error indicates a problem with the program sending the element. The value *xxxxxxx* is the message number.

System action

The remainder of the record is ignored to prevent erroneous results.

Operator response

None.

System programmer response

Examine the trace data to determine which program produced the error.

User response

Not applicable.

Problem determination

Not applicable.

Source

None.

Module

DSJCEPRT on behalf of DSJNTITR to SYSNEPRT

Routing code

Not applicable.

Descriptor code

Not applicable.

Automation

Not applicable.

Example

None.

DSJ274I **Message *xxxxxxx* INVALID MESSAGE IDENTIFIER**

Explanation

A program other than ACF/TAP has sent a record with an element ID that is not valid. This error indicates a problem with the program that has sent the element.

The value *xxxxxxx* is the message number.

System action

The remainder of the record is ignored to prevent erroneous results.

Operator response

None.

System programmer response

Examine the trace data to determine which program produced the error.

User response

Not applicable.

Problem determination

Not applicable.

Source

None.

Module

DSJCEPRT on behalf of DSJNTITR to SYSPRINT or console.

Routing code

Not applicable.

Descriptor code

Not applicable.

Automation

Not applicable.

Example

None.

DSJ275I LINENODE=*user selection criteria*

Explanation

Messages DSJ275I-DSJ279I and DSJ290I are issued either to the console in response to the LIST command entered at the console, or to SYSPRINT in response to the GO command issued from either the console or the parameter input file. When output is to the console, all of the messages listed are produced. When output is to SYSPRINT, the only messages printed are those whose default values were used, or those whose values were specified by the user and used during the processing of the trace file.

System action

Processing continues.

Operator response

None.

System programmer response

For information about setting of the parameters, see Chapter 4, “ACF/TAP parameters,” on page 21.

User response

Not applicable.

Problem determination

Not applicable.

Source

None.

Module

None.

Routing code

Not applicable.

Descriptor code

Not applicable.

Automation

Not applicable.

Example

None.

DSJ276I GPTNODE=user selection criteria

Explanation

Messages DSJ275I-DSJ279I and DSJ290I are issued either to the console in response to the LIST command entered at the console, or to SYSPRINT in response to the GO command issued from either the console or the parameter input file. When output is to the console, all of the messages listed are produced. When output is to SYSPRINT, the only messages printed are those whose default values were used, or those whose values were specified by the user and used during the processing of the trace file.

System action

None.

Operator response

Processing continues.

System programmer response

For information about setting the parameters, see Chapter 4, “ACF/TAP parameters,” on page 21.

User response

Not applicable.

Problem determination

Not applicable.

Source

None.

Module

None.

Routing code

Not applicable.

Descriptor code

Not applicable.

Automation

Not applicable.

Example

None.

DSJ277I BFFRNODE=user selection criteria

Explanation

Messages DSJ275I-DSJ279I and DSJ290I are issued either to the console in response to the LIST command entered at the console, or to SYSPRINT in response to the GO command issued from either the console or the parameter input file. When output is to the console, all of the messages listed are produced. When output is to SYSPRINT, the only messages printed are those whose default values were used, or those whose values were specified by the user and used during the processing of the trace file.

System action

Processing continues.

Operator response

None.

System programmer response

For information about setting the parameters, see Chapter 4, “ACF/TAP parameters,” on page 21.

User response

Not applicable.

Problem determination

Not applicable.

Source

None.

Module

None.

Routing code

Not applicable.

Descriptor code

Not applicable.

Automation

Not applicable.

Example

None.

DSJ278I RNIONODE=user selection criteria

Explanation

Messages DSJ275I-DSJ279I and DSJ290I are issued either to the console in response to the LIST command entered at the console, or to SYSPRINT in response to the GO command issued from either the console or the parameter input file. When output is to the console, all of the messages listed are produced. When output is to SYSPRINT, the only messages printed are those whose default values were used, or those whose values were specified by the user and used during the processing of the trace file.

System action

Processing continues.

Operator response

None.

System programmer response

For information about setting the parameters, see Chapter 4, “ACF/TAP parameters,” on page 21.

User response

Not applicable.

Problem determination

Not applicable.

Source

None.

Module

None.

Routing code

Not applicable.

Descriptor code

Not applicable.

Automation

Not applicable.

Example

None.

DSJ279I CTLRNODE=user selection criteria

Explanation

Messages DSJ275I-DSJ279I and DSJ290I are issued either to the console in response to the LIST command entered at the console, or to SYSPRINT in response to the GO command issued from either the console or the parameter input file. When output is to the console, all of the messages listed are produced. When output is to SYSPRINT, the only messages printed are those whose default values were used, or those whose values were specified by the user and used during the processing of the trace file.

System action

Processing continues.

Operator response

None.

System programmer response

For information about setting the parameters, see Chapter 4, “ACF/TAP parameters,” on page 21.

User response

Not applicable.

Problem determination

Not applicable.

Source

None.

Module

DSJCEPRT on behalf of DSJCPARM to SYSPRINT or console.

Routing code

Not applicable.

Descriptor code

Not applicable.

Automation

Not applicable.

Example

None.

DSJ282I NO CORRELATED FULL DUPLEX DATA FOUND. SEE SYSPRINT, LDPRT FOR LINE DATA

Explanation

The line trace summary report was requested. LSPRT is produced for controllers that contain scanner 3 or 3x, or for correlated duplex SDLC and X.25 data. No data of these types was found.

System action

Processing continues.

Operator response

None.

System programmer response

No response is necessary.

User response

Not applicable.

Problem determination

Not applicable.

Source

None.

Module

DSJTDRVR

Routing code

Not applicable.

Descriptor code

Not applicable.

Automation

Not applicable.

Example

None.

DSJ283I **DATA ELEMENT xxxxxxx HAS LENGTH OF ZERO - POSSIBLE LOST DATA**

Explanation

Line trace data element number xxxxxxx was encountered with a length field of zero. There might be a problem with NCP in that it might not have traced some data.

System action

Processing continues.

Operator response

None.

System programmer response

Examine the trace data to determine the cause of the error.

User response

Not applicable.

Problem determination

Not applicable.

Source

None.

Module

DSJCEPRT on behalf of DSJCPARM to SYSPRINT or console.

Routing code

Not applicable.

Descriptor code

Not applicable.

Automation

Not applicable.

Example

None.

DSJ284I **LOGADDR = *nnnn....nnnn* (LOGICAL LINE ADDRESS)**

Explanation

This message lists the logical line addresses selected for the connectivity subsystem line trace report (CSPRT). *nnnn....nnnn* contains one of the following:

- A list of logical line addresses (*nnnn*,*nnnn*,...)
- A range of logical line addresses (*nnnn*-*nnnn*)
- ALL for all logical lines selected.

System action

Processing continues.

Operator response

None.

System programmer response

No response is necessary.

User response

Not applicable.

Problem determination

Not applicable.

Source

None.

Module

DSJCEPRT on behalf of DSJCPARM to SYSPRINT or console.

Routing code

Not applicable.

Descriptor code

Not applicable.

Automation

Not applicable.

Example

None.

DSJ285I **UNABLE TO OPEN SYSCSPRT/SYS018**

Explanation

The named output print file could not be opened.

System action

The main routine terminates after closing the files that were opened.

Operator response

None.

System programmer response

Take one of the following actions:

- When prompted for additional parameters, enter QUIT to stop processing immediately, or *xxxxx*=NO to ignore the data sets that could not be opened (*xxxxx* is SSPRT, SDPRT, LSPRT, LDPRT, NEPRT, GSPRT, or DTPRT).
- Check for a missing JCL statement.

User response

Not applicable.

Problem determination

Not applicable.

Source

None.

Module

DSJCEPRT on behalf of DSJCETAP to SYSPRINT or console.

Routing code

Not applicable.

Descriptor code

Not applicable.

Automation

Not applicable.

Example

None.

DSJ286I **UNABLE TO OPEN SYSTEMP1/SYS019**

Explanation

The named output print file could not be opened.

System action

The main routine terminates after closing the files that were opened.

Operator response

None.

System programmer response

Do one of the following:

- When prompted for additional parameters, enter QUIT to stop processing immediately, or *xxxxx*=NO to ignore the data sets that could not be opened (*xxxxx* is SSPRT, SDPRT, LSPRT, LDPRT, NEPRT, GSPRT, or DTPRT).
- Check for a missing JCL statement.

User response

Not applicable.

Problem determination

Not applicable.

Source

None.

Module

DSJCEPRT on behalf of DSJCETAP to SYSPRINT or console.

Routing code

Not applicable.

Descriptor code

Not applicable.

Automation

Not applicable.

Example

None.

DSJ287I UNABLE TO OPEN SYSTEMP2/SYS020

Explanation

The named output print file could not be opened.

System action

The main routine terminates after closing the files that were opened.

Operator response

None.

System programmer response

Take one of the following actions:

- When prompted for additional parameters, enter QUIT to stop processing immediately, or *xxxxx*=NO to ignore the data sets that could not be opened (*xxxxx* is SSPRT, SDPRT, LSPRT, LDPRT, NEPRT, GSPRT, or DTPRT).
- Check for a missing JCL statement.

User response

Not applicable.

Problem determination

The named output print file could not be opened, or the trace output file was assigned IGN.

Source

None.

Module

DSJCEPRT on behalf of DSJCETAP to SYSPRINT or console.

Routing code

Not applicable.

Descriptor code

Not applicable.

Automation

Not applicable.

Example

None.

DSJ288I CAPRT = x Y=YES N=NO

Explanation

This message indicates whether the connectivity subsystem adapter trace report (CAPRT) was selected.

System action

Processing continues.

Operator response

None.

System programmer response

No response is necessary.

User response

Not applicable.

Problem determination

Not applicable.

Source

None.

Module

DSJCEPRT on behalf of DSJCPARM to SYSPRINT or console.

Routing code

Not applicable.

Descriptor code

Not applicable.

Automation

Not applicable.

Example

None.

DSJ289I CSATYPE = ALL

Explanation

This message indicates the selection of trace types for the connectivity subsystem adapter trace report (CAPRT). See Chapter 4, "ACF/TAP parameters," on page 21 for all valid values of this parameter. ALL is the default value and causes all CSA trace elements to appear on the CAPRT.

System action

Processing continues.

Operator response

None.

System programmer response

No response is necessary.

User response

Not applicable.

Problem determination

Not applicable.

Source

None.

Module

DSJCEPRT on behalf of DSJCPARM to SYSPRINT or console.

Routing code

Not applicable.

Descriptor code

Not applicable.

Automation

Not applicable.

Example

None.

DSJ290I DLCI=user selection criteria (DATA LINK CONNECTION IDENTIFIER)

Explanation

Messages DSJ275I-DSJ279I and DSJ290I are issued either to the console in response to the LIST command entered at the console, or to SYSPRINT in response to the GO command issued from either the console or the parameter input file. When output is to the console, all of the messages listed are produced. When output is to SYSPRINT, the only messages printed are those whose default values were used, or those whose values were specified by the user and used during the processing of the trace file.

System action

Processing continues.

Operator response

None.

System programmer response

No response is necessary.

User response

Not applicable.

Problem determination

Not applicable.

Source

None.

Module

None.

Routing code

Not applicable.

Descriptor code

Not applicable.

Automation

Not applicable.

Example

None.

DSJ291I UNABLE TO OPEN SYSCAPRT/SYS021:

Explanation

The named output print file could not be opened.

System action

The main routine terminates after closing the files that were opened.

Operator response

None.

System programmer response

Take one of the following actions:

- When prompted for additional parameters, enter QUIT to stop processing immediately, or *xxxxx*=NO to ignore the data sets that could not be opened. The value *xxxxx* is SSPRT, SDPRT, LSPRT, LDPRT, NEPRT, GSPRT, or DTPRT.
- Check for a missing JCL statement.

User response

Not applicable.

Problem determination

Not applicable.

Source

None.

Module

DSJCEPRT on behalf of DSJCPARM to SYSPRINT or console.

Routing code

Not applicable.

Descriptor code

Not applicable.

Automation

Not applicable.

Example

None.

DSJ292I CSPRT = x Y=YES N=NO

Explanation

This message indicates whether the connectivity subsystem line trace report (CSPRT) was selected.

System action

Processing continues.

Operator response

None.

System programmer response

No response is necessary.

User response

Not applicable.

Problem determination

Not applicable.

Source

None.

Module

DSJCEPRT on behalf of DSJCPARM to SYSPRINT or console.

Routing code

Not applicable.

Descriptor code

Not applicable.

Automation

Not applicable.

Example

None.

DSJ293I **TOSUP = x Y = YES N = NO (TIMEOUT SUPPRESSION)**

Explanation

This message indicates whether TIMEOUT messages are suppressed in the line trace detail report (LDPRT) or the line trace summary report (LSPRT).

System action

Processing continues.

Operator response

None.

System programmer response

No response is necessary.

User response

Not applicable.

Problem determination

Not applicable.

Source

None.

Module

DSJCEPRT on behalf of DSJCPARM to SYSPRINT or console.

Routing code

Not applicable.

Descriptor code

Not applicable.

Automation

Not applicable.

Example

None.

DSJ304I **FRPRT = *x* Y=YES N=NO**

Explanation

This message indicates whether the frame-relay logical line trace summary report (FRPRT) was selected.

System action

Processing continues.

Operator response

None.

System programmer response

No response is necessary.

User response

Not applicable.

Problem determination

Not applicable.

Source

None.

Module

DSJCEPRT on behalf of DSJCPARM to SYSPRINT or console.

Routing code

Not applicable.

Descriptor code

Not applicable.

Automation

Not applicable.

Example

None.

DSJ305I UNABLE TO OPEN SYSFRPRT/SYS022

Explanation

The named output print file could not be opened.

System action

Processing continues until all other output print files are opened. You are then prompted for additional parameters.

Operator response

None.

System programmer response

Take one of the following actions:

- When prompted for additional parameters, enter QUIT to stop processing immediately, or FRPRT=NO to ignore the data set that could not be opened.
- Check for a missing JCL statement.

User response

Not applicable.

Problem determination

Not applicable.

Source

None.

Module

DSJCEPRT on behalf of DSJCPARM to SYSPRINT or console.

Routing code

Not applicable.

Descriptor code

Not applicable.

Automation

Not applicable.

Example

None.

Appendix B. ACF/TAP sample reports

After you create a trace file, ACF/TAP processes it and prepares various types of reports. The reports range from a general log of every trace record to a detailed report of specific trace records. This topic includes samples of each report and a description of its contents.

For line trace data that is collected by network control program (NCP) on duplex lines other than CSS lines, NCP stores the information in separate buffers: one for transmit and one for receive. The buffer that fills up first is transmitted to the host; ACF/TAP sees the trace data in blocks and out of order. To sort the trace data and put it in sequential order, run the line trace summary report. You can then cross-reference the trace entries to one of the following four reports to view the details:

- X.25 line trace
- Line trace detail
- SNA summary
- SNA detail

In the line trace summary report, use the element number to cross-reference trace data to the X.25 line trace and line trace detail reports. To cross-reference trace data to the SNA summary and SNA detail reports, use the message number in the line trace summary report.

Reporting ACF/TAP data using record numbers

When ACF/TAP processes trace data files, it sequentially numbers the records in several different ways. The numbering makes it easy to cross-reference the same record in different types of reports. Figure 6 on page 168 shows an example of a VTAM trace file with different types of trace records on it.

Notes:

1. ACF/TAP sequentially numbers every record on a trace file, even if the record is a type that ACF/TAP does not process. This absolute sequence number appears only on the SYSPRINT log.
2. ACF/TAP sequentially numbers every record that it processes (SUMMARY=EVERY) or can process (SUMMARY=YES or ALL) when it scans the file (INPUT=SCAN). ACF/TAP tests the count select limits (START=count; END=count) against this process number. See “START and END parameters” on page 51 for more information.
3. ACF/TAP sequentially numbers each PIU and buffer trace record that it can process. ACF/TAP tests the count select limits against the host trace record number. Every PIU that ACF/TAP analyzes is called a message and is assigned a message number.
4. A line trace record consists of multiple NCP line trace events of variable length, depending on the type of communication scanner. ACF/TAP sequentially numbers each NCP line trace event and refers to it by an element number. A GPT record can consist of multiple events of variable length. ACF/TAP sequentially numbers each GPT event and refers to it by an element number.
5. A line trace message can consist of multiple elements that can span one or more records. Each message that is assembled from the line trace data is assigned a message number. A line trace record can contain more than one message.

© Copyright IBM Corp. 2000, 2025

```
                                                        (VTAM Trace File, Recorded by GTF on MVS only)
            |
            |_____________________ Trace File
-------------------------------------------------------------------------------------------------------->
            |                                                 SOURCE=GTF
             ___________ ___________ ___________ ___________ ___________ ___________ ___________ ___________
-------------->
            | Absolute  | Absolute  | Absolute  | Absolute  | Absolute  | Absolute  | Absolute  | Absolute  | Absolute
        1   | Sequence  | Sequence  | Sequence  | Sequence  | Sequence  | Sequence  | Sequence  | Sequence  | Sequence
            | #1        | #2        | #3        | #4        | #5        | #6        | #7        | #8        | #9
            |___________|___________|___________|___________|___________|___________|___________|___________|
-------------->
            | TYPE=     | TYPE=     | TYPE=     | TYPE=     | TYPE=     | TYPE=     | TYPE=     | TYPE=     | TYPE=
            | GTF       | RNIO      | NCP Line  | User Trace| VTAM      | RNIO      | NCP Line  | GPT       | GPT
        2   | Header    | Trace     | Trace     | (Not      | Buffer    | Trace     | Trace     | Trace     | Trace
            |           | #1        | #1        | Processed)| Trace     | #2        | #2        | #1        | #2
            |           |           |           | #1        | #1        |           |           |           |
            |___________|___________|___________|___________|___________|___________|___________|___________|
-------------->
            |           | RNIO      |           |           | VTAM      | RNIO      |           |           |
        3   |           | Message   |           |           | Buffer    | Message   |           |           |
            |           | #1        |           |           | Message   | #2        |           |           |
            |           |           |           |           | #1        |           |           |           |
            |___________|___________|___________|___________|___________|___________|___________|___________|
-------------->
            |           |           | Multiple  |           |           |           | Multiple  | Multiple  | Multiple
        4   |           |           | Line Trace|           |           |           | Line Trace| GPT Trace | GPT Trace
            |           |           | Elements  |           |           |           | Elements  | Elements  | Elements
            |___________|___________|__ _ _ _ __|___________|___________|___________|__ _ _ _ __|__ _ _ _ __|
-------------->
            |           |           | #|#|#|#|# |           |           |           | #|#|#| |# | #|#|#|#|# |
            |           |           | 1|2|3|4|5 |           |           |           | 6|7|8| |n | 1|2|3|4|5 |
        4   |           |           |  | | | |  |           |           |           |  | | | |  |  | | | |  |
            |           |           |  | | | |  |           |           |           |  | | | |  |  | | | |  |
            |           |           | S| | | |  |           |           |           |  | |E| |  |  | | | |  |
            |___________|___________|__|_|_|_|__|___________|___________|___________|__|_|_|_|__|__|_|_|_|__|
-------------->
                                    | A         |                                           A|
                     Start of ______|_|         |                    End of Message (E) __||
                     Message (S)    | Line Trace|                                            |
                                    | Elements  |                                            |
                                    | #1 to #5  |                                            |
                                    |___________|                                            |
                                    |_________________ Line Trace Message #1 ________________|

                                                                  5
```

Figure 6. ACF/TAP method for numbering trace file input data

CSS adapter trace reports

This topic includes CSS adapter trace reports. See the following figures:

- Figure 7 on page 174
- Figure 8 on page 175
- Figure 9 on page 176
- Figure 10 on page 177
- Figure 11 on page 178
- Figure 12 on page 179

Table 24 on page 168 describes the column headers and the trace data that are contained in this report type. To locate this information in the sample reports, match the numbers (n) listed in this table to the corresponding numbers (n) shown in the sample reports.

Table 24. Report description for CSS adapter trace reports

Reference number (n)	Report column headers and the trace data
1	The page heading contains the report name, report parameter, and the date on which the report was printed or displayed.

Table 24. Report description for CSS adapter trace reports (continued)	
Reference number (n)	**Report column headers and the trace data**
2	**RECORD/TYPE** The record is the sequence number that ACF/TAP assigns of the physical line trace record that ACF/TAP was processing when this line was printed. Entries following the sequence number show the type of data being traced, which includes the following: **Internal data** Controller bus adapter: **CBS-CHK** Checkpoint **CBA-PROC** Processor Communication line adapter: **CLA-CHK** Checkpoint **CLA-LSA** LSA primitives ESCON adapter: **ESCA-CBC** With controller bus coupler **ESCA-CBP** With controller bus processor **ESCA-DATA** Data messages **ESCA-DPSA** DPSA messages **ESCA-PCHK** Processor checkpoint **ESCA-CCHK** Coupler checkpoint Frame-Relay, ISDN, and X.25: **CSS-CBC** Controller bus coupler **CSS-CBP** Controller bus processor **CSS-CDIM** CDIM messages **CSS-CHK** Checkpoint **CSS-CSS** Connectivity subsystem **CSS-LSA** LSA primitives

Table 24. Report description for CSS adapter trace reports (continued)	
Reference number (n)	**Report column headers and the trace data**
2 (Continued)	**CSS-MSG** Messages **CSS-SSA** SSA primitives **ISDN-CHK** Checkpoint (ISDN only) Mapper: **MAPR-CBC** With controller bus coupler **MAPR-CBP** With controller bus processor **MAPR-CDIM** CDIM messages **MAPR-LSA** LSA primitives **MAPR-MSG** Messages **MAPR-SSA** SSA primitives

Table 24. Report description for CSS adapter trace reports (continued)	
Reference number (n)	**Report column headers and the trace data**
2 (Continued)	Token ring adapter **TRA-PSSA** SSA primitives **TRA-LSA** LSA primitives **TRA-CDIM** CDIM messages **External data** Controller bus adapter: **CBA-CPLR** Coupler Communication line adapter: **CLA-PIU** Path information unit **CLA-MAC** MAC MODEM ESCON adapter: **ESCA-PIU** Path information unit **ECSA-CPLR** Coupler Frame relay: **FRLY-FRFH** Frame-relay frame handler **FRLY-FRTE** Frame-relay terminal equipment **FRLY-HPR** High performance routing **FRLY-IP** Internet Protocol **FRLY-LMI** Local management interface Internet Protocol: **IP-RECV** Receive data **IP-XMIT** Transmit data

Table 24. Report description for CSS adapter trace reports (continued)	
Reference number (n)	**Report column headers and the trace data**
2 (Continued)	ISDN: **ISDN-LIC** Line interface data **ISDN-RECV** Receive data **ISDN-XMIT** Transmit data Token ring adapter: **TRA-CPLR** Coupler X.25 adapter: **X.25–RECV** Receive **X.25–XMIT** Transmit
3	**ELEM ADDRESS** The element address of the physical line that was being traced.
4	**HOST LINK** The logical line number of the line that was being traced.
5	**HOST STATION** The logical station number of the station that was being traced.
6	**ADAPTER-ID** The logical adapter number given by the NCP in the TRACE START NDPSA.
7	**LINE-ADDRESS** The relative line number in the processor of the line that was being traced.
8	**CBA-ID** The logical adapter number of the controller bus adapter.
9	**COMMAND QUALIFIER** The command and qualifier that was being processed when the trace record was written.
10	**TIME** The time that elapsed (in hexadecimal format) between the entries, to the nearest 100 milliseconds. The time is measured from the activation of the trace to the second-level interrupt represented by each entry.
11	**SEQ** The sequence counter from the CSS control block that is being displayed.
12	**HEX** The hexadecimal trace entry from the control block.
13	**TRANSLATION** The EBCDIC equivalent of the hexadecimal trace data.

Table 24. Report description for CSS adapter trace reports (continued)	
Reference number (n)	**Report column headers and the trace data**
14	Pertinent fields are extracted from the preceding trace entry and are displayed on a separate line as field names, followed by their corresponding values in parentheses.

15 CSS token-ring data reports only	The command identifier for transmit or receive token-ring frames.
	The following are examples:
	`XMT RR .C,F, NR=74`
	`RCV RR .R,F, NR=48`
	where:
	XMT
	Transmit frame
	RCV
	Receive frame
	Information frame
	I
	Supervisory frame
	RR, RNR, REJ
	Unnumbered frame
	DM, DISC, FRMR, SABME, SIM, TEST, UA, XID
	C
	Command
	R
	Response
	P
	Poll
	F
	Final
	NR
	Number of information and supervisory frames received
	NS
	Number of information and supervisory frames sent
	Blank
	Unnumbered frame

For more information about gathering data for this trace, see Chapter 2, “Gathering host-collected trace data,” on page 7.

For a detailed description of the column headers and trace data, reference the numbers (n) shown in the sample report to the corresponding numbers (n) listed in Figure 7 on page 174 through Figure 12 on page 179, see Table 24 on page 168.

Communications line adapter PIU data sample report

```
                                                                1
          VTAM                                ADVANCED COMMUNICATIONS FUNCTION
                                                        TRACE ANALYSIS PROGRAM
                                           CONNECTIVITY SUBSYSTEM ADAPTER TRACE (CAPRT)    DATE: mm:dd:yyyy            PAGE:00001
                        .HOST LINK   4
                        |  .HOST STATION   5
                        |  |  .ADAPTER-ID   6
                        |  |  |  .LINE-ADDRESS   7
                        |  |  |  |  .CBA-ID   8
RECORD/     ELEM        |  |  |  |  |          9                                                                    13
  TYPE      ADDR        V  V  V  V  V          COMMAND QUALIFIER        TIME SEQ          HEX                        TRANSLATION
2            3                                                           10   11          12
000130      000D
 CLA-LSA                                DLC ID REQUEST                 DB76
                                                                            ICI:  000C0C20 00056002 28710004          ......-.....
                                        INCOMING LSA DL PRIM   P.ID (28710004)

 CLA-PIU                                XMIT U-FRAME XID               DB78       00020001 209800C1 BF                .....q.A.
                                        MSG NUM 000001   ADDRESS (C1)   CONTROL (BF)   PIU LENGTH (0002)
                                        C/R (R)   P/F (P)

 CLA-MAC                                MODEM OUT                      DB78       0201D2                              ..K
                                        PHYSICAL PORT NUMBER (02)

000145      000D
 CLA-LSA                                DLC ID CONFIRM                 DB78
                                                                            ICI:  0018CC20 01056001 80800000 00065000 ......-.......&.
                                                                                  00065000 00000000                   ..&.....
                                                                             ID:  01808004 01818000 00000030 30303030 .....a..........
                                                                                  30303000 01028000 00000000 00000000 ................
                                                                                  00000000 00000000 00000000 00000000 ................
                                                                                  00000000 00000000 00000000 00000000 ................
                                                                                  00000000 00000000 00000000 00000000 ................
                                                                                  00000000 00000000 00000000 00000000 ................
                                                                                  00000000 00000000 15530301 00040200 ................
                                                                                  00040300 00040400 00040500 00000000 ................
                                                                                  19560301 00040200 00040300 00040400 ................
                                                                                  00040500 00040600 00000000 00000000 ................
                                                                                  00000000 00000000 00000000 00000000 ................
                                                                                  00000000 00000000 00000000 00000000 ................
                                                                                  00000000 00000000 00000000 00000000 ................
                                                                                  00000000 00000000 00000000 00000000 ................
                                                                                  00000000 00000000                   ........
                                        OUTGOING LSA DL PRIM   U.ID (80800000)
                                                                                  TRUNCATED DATA, SEE SYSPRINT FOR ENTIRE DATA

 CLA-MAC                                MODEM IN                       DB78       0201C0                              ...
                                        PHYSICAL PORT NUMBER (02)

 CLA-PIU                                XMIT U-FRAME XID               DB98       00020001 201800C1 BF                .......A.
                                        MSG NUM 000002   ADDRESS (C1)   CONTROL (BF)   PIU LENGTH (0002)
                                        C/R (R)   P/F (P)

 CLA-PIU                                XMIT U-FRAME XID               DBB8       00020001 201800C1 BF                .......A.
                                        MSG NUM 000003   ADDRESS (C1)   CONTROL (BF)   PIU LENGTH (0002)
                                        C/R (R)   P/F (P)

 CLA-PIU                                XMIT U-FRAME XID               DBD8       00020001 201800C1 BF                .......A.
                                        MSG NUM 000004   ADDRESS (C1)   CONTROL (BF)   PIU LENGTH (0002)
                                        C/R (R)   P/F (P)
```

Figure 7. Communications line adapter PIU data sample report

CSS adapter with ECB flag sample report

```
            VTAM                                ADVANCED COMMUNICATIONS FUNCTION
                                                         TRACE ANALYSIS PROGRAM
                                           CONNECTIVITY SUBSYSTEM ADAPTER TRACE (CAPRT)    DATE: mm:dd:yyyy              PAGE:00001
                        .HOST LINK   4
                        |  .HOST STATION   5
                        |  |  .ADAPTER-ID   6
                        |  |  |  .LINE-ADDRESS   7
                        |  |  |  |  .CBA-ID   8
RECORD/     ELEM        |  |  |  |  |            9                                                                    13
  TYPE      ADDR        V  V  V  V  V         COMMAND QUALIFIER        TIME SEQ          HEX                          TRANSLATION
2            3                                                           10   11          12

000431      0012
 MAPR-LSA                             DLC DATA REQUEST              0000       40000000 00014000 00000012 0404      ..... .......
                                                                         ICI:  00100D10 00436002 00F20404 C0000000 ......-..2......
                                                                          ID:  01808000 06CE0504 90CA0540 00000200 ........... ....
                                                                               00000000 00000600 0000201D 00000000 ................
                                                                               00000000 1E2B0000 0F000001 00000000 ................
                                                                               20000000 06250200 000008FF 00000000 ................
                                                                               20FFFF                              ...
                                      ECB FLAG (P REQ; EWI;      ;     ;    ; LOW ) ACK(00) MORE (00)
                                      NCP.LRID (400000) CSS.LRID (000001)  U.ID (40000000) P.ID (00120404)

 TRA-LSA                              DLC MODIFY STATION REQUEST     7E15       40000000 00014000 00000012 0404      ..... .......
                                                                         ICI:  00100C0C 002D6002 00F20404 FD3D8004 ......-..2......
                                                                          ID:  01808033 01025807 06020504 04CE10CE ................
                                                                               00010007 00010504 65000004 00100C0C ................
                                                                               002D6002 00F20404 FD3D8004 90       ..-..2.......
                                      LMAC (400000000001) RMAC (400000000012) LSAP (04) RSAP (04) P.ID (00F20404)

000432      0012
 TRA-LSA                              DLC MODIFY STATION CONFIRM     7E16       40000000 00014000 00000012 0404      ..... .......
                                                                         ICI:  001CCC0C 002D6001 80800000 00167000 ......-.........
                                                                               00067000 00000000 40000000          ........ ...
                                                                          ID:  01808033 01025807 06020504 04CE10CE ................
                                                                               00010007 00010504 65000004 00100C0C ................
                                                                               002D6002 00F20404 FD3D8004 90       ..-..2.......
                                      LMAC (400000000001) RMAC (400000000012) LSAP (04) RSAP (04) U.ID (80800000)

 TRA-LSA                              DLC DATA RESPONSE              7E16       40000000 00014000 00000012 0404      ..... .......
                                                                         ICI:  000E8D10 00036002 00F20404 2000      ......-..2....
                                                                          ID:  018080                               ...
                                      LMAC (400000000001) RMAC (400000000012) LSAP (04) RSAP (04) P.ID (00F20404)
                                      ECB FLAG (     ;    ; P RSP;     ;    ;     ) ACK(00)

 TRA-LSA                              DLC DATA REQUEST               7E16       40000000 00014000 00000012 0404      ..... .......
                                                                         ICI:  00100D10 00436002 00F20404 C0000000 ......-..2......
                                                                          ID:  01808000 06CE0504 90CA0540 00000200 ........... ....
                                                                               00000000 00000600 0000201D 00000000 ................
                                                                               00000000 1E2B0000 0F000001 00000000 ................
                                                                               20000000 06250200 000008FF 00000000 ................
                                                                               20FFFF                              ...
                                      LMAC (400000000001) RMAC (400000000012) LSAP (04) RSAP (04) P.ID (00F20404)
                                      ECB FLAG (P REQ; EWI;      ;     ;    ; LOW ) ACK(00) MORE (00)

 TRA-LSA                              DLC DATA CONFIRM               7E16       40000000 00014000 00000012 0404      ..... .......
                                                                         ICI:  001ECD10 00036401 80800000 00007000 ................
                                                                               00000000 00000000 00000000 2000      ..............
                                                                          ID:  018080                               ...
                                      LMAC (400000000001) RMAC (400000000012) LSAP (04) RSAP (04) U.ID (80800000)
                                      ECB FLAG (     ;    ; P RSP;     ;    ;     ) ACK(00)
```

Figure 8. CSS adapter with ECB flag, sample report

ESCON data, CSS adapter trace sample report

The report shown in Figure 9 on page 176 applies to NCP V6R2 and later releases.

```
          VTAM                                ADVANCED COMMUNICATIONS FUNCTION
                                                     TRACE ANALYSIS PROGRAM
                                          CONNECTIVITY SUBSYSTEM ADAPTER TRACE (CAPRT)    DATE: mm:dd:yyyy            PAGE: 00001
                        .HOST LINK   4
                        |  .HOST STATION   5
                        |  |  .ADAPTER-ID   6
                        |  |  |  .LINE-ADDRESS   7
                        |  |  |  |  .CBA-ID   8
RECORD/     ELEM        |  |  |  |  |            9                                                                    13
  TYPE      ADDR        V  V  V  V  V         COMMAND QUALIFIER        TIME SEQ          HEX                         TRANSLATION
2            3                                                          10   11          12

000026      01E0
 ESCA-PIU               01 01          X-PIU (MSG NUMBER = 000003)    47D9       01014000 00022000 84E50000 002B0000 .. .....dV......
                                                                                   002A1C00 00010000 02D3075E 0B000001 .........L.;....
                                                                                   038301E0 89A2E701 A000              .c..isX...

 ESCA-PIU               01 01          X-PIU (MSG NUMBER = 000004)    47D9       01014000 00022000 04E60000 002B0000 .. ......W......
                                                                                   002A1C00 00010000 02D406CB 0B000001 .........M......
                                                                                   038301E0 0D03FF41 A000              .c........

 ESCA-PIU               01 01          X-PIU (MSG NUMBER = 000005)    47D9       01014000 00022000 04E70000 002B0000 .. ......X......
                                                                                   002A1C00 00010000 02D506B2 0B000001 .........N......
                                                                                   038301E0 0D03FF41 A000              .c........

 ESCA-PCHK              01 01          ENQUE DSM MESSAGE              47D9       010110F0 34FC0100 D0020522 02010D   ...0..........

 ESCA-PCHK              01 01          ESCC MESSAGE                   47D9       01012C00 FE000200 FDFF0128 002060F0 .............-0
                                                                                   36FC1400 00000800 0000031D 01010000 ................
                                                                                   40000080 00000000 04030300 0000      ............

000027      01E0
 ESCA-DPSA              01 01 05 00 1E NDPSA PIU                      47D9 0353  01014B80 05001E00 00000000 0C010000 ................
                                                                                   00000001 003BCBF4 00000000 00000000 .......4........
                                                                                   03530000 823B                       ....b.
                                       FLAGS (0000) LRID (000001) ACK COUNT (00)  14
                                       DATA FOLLOWS

 ESCA-PCHK              01 01          MODULE ENTRY LEVEL             47D9       0101FD01 00002420 4B800500 1E000000 ................
                                                                                   00000C01 00000100 0000010A 0A0A0840 ...............
                                                                                   00000000 00000000 00000800 00000000 ................
                                                                                   000000D0 0700321F 00000500 2100F4FF .............4.
                                                                                   0100                                ..

 ESCA-DPSA              01 01 05 00 1E NDPSA PIU                      47D9 0353  01014B80 05001E00 00000000 0C010000 ................
                                                                                   00000001 003BCBF4 00000000 00000000 .......4........
                                                                                   03530000 023B                       ......
                                       FLAGS (0000) LRID (000001) ACK COUNT (00)  14
                                       DATA FOLLOWS

000028      01E0
```

Figure 9. ESCON data, CSS adapter trace sample report

Frame-relay data, CSS adapter trace sample report

```
                                                                1
          VTAM                                  ADVANCED COMMUNICATIONS FUNCTION
                                                          TRACE ANALYSIS PROGRAM
                                            CONNECTIVITY SUBSYSTEM ADAPTER TRACE (CAPRT)    DATE: mm:dd:yyyy             PAGE: 00001
                        .HOST LINK   4
                        |  .HOST STATION   5
                        |  |  .ADAPTER-ID   6
                        |  |  |  .LINE-ADDRESS   7
                        |  |  |  |  .CBA-ID   8
RECORD/     ELEM        |  |  |  |  |              9                                                                          13
  TYPE      ADDR        V  V  V  V  V         COMMAND QUALIFIER        TIME SEQ          HEX                          TRANSLATION
2            3                                                          10   11          12

 FRLY-CHK                            FRAME RELAY CHECKPOINT DATA    4C75       09000000 0C000000 4C4D4970 4C524443 ........<(..<...
                                                                               6C726471 6C726478 4C524447 4C524448 %...%...<...<...
                                                                               4C4D3242 4C524441 4C52444E 4C524465 <(..<...<..+<...
                                                                               D3D9C4E6 C3D5D4C5 D3D9C4F1 41435442 LRDWCNMELRD1....
                                                                               4C524451 4C4D493B                   <...<(..
                                     CHKPT DATA:LRD1 CNME LRDW

 FRLY-CBP                  05 00 1E  LDPSA ACKNOWLEDGE              4C75       49000500 1E008800 00004C52          ......h...<.

 FRLY-CHK                            FRAME RELAY CHECKPOINT DATA    4C81       0C000000 0C000000 4C4D4970 4C524443 ........<(..<...
                                                                               6C726471 6C726478 4C524447 4C524448 %...%...<...<...
                                                                               4C4D3242 4C524441 4C52444E 4C524465 <(..<...<..+<...
                                                                               4C524457 434E4D45 4C524431 41435442 <....+(.<.......
                                                                               4C524451 4C4D493B                   <...<(..

000061      0004
 FRLY-CHK                            FRAME RELAY CHECKPOINT DATA    4C81       0C000000 0C000000 4C4D4970 4C524443 ........<(..<...
                                                                               6C726471 6C726478 4C524447 4C524448 %...%...<...<...
                                                                               4C4D3242 4C524441 4C52444E 4C524465 <(..<...<..+<...
                                                                               4C524457 434E4D45 4C524431 41435442 <....+(.<.......
                                                                               4C524451 4C4D493B                   <...<(..

 FRLY-LMI                            FRAME RELAY LMI RECEIVE        4C81       00010308 00759501 01010302 0201582E ......n.........
                                     FRAME RELAY ADDRESS (0001)  DLCI (000 (0000)
                                     C/R (0)  FECN (0)  BECN (0)  D/E (0)

 FRLY-LMI                            FRAME RELAY LMI TRANSMIT       4C81       00010308 007D9501 01000302 02020703 .....'n.........
                                                                               01808007 03018880 070301A8 88070303 ......h....yh...
                                                                               80800703 0D8082                     ......b
                                     FRAME RELAY ADDRESS (0001)  DLCI (000 (0000)
                                     C/R (0)  FECN (0)  BECN (0)  D/E (0)

000062      0004
 FRLY-CHK                            FRAME RELAY CHECKPOINT DATA    4CB5       0C000000 0C000000 4C4D4970 4C524443 ........<(..<...
                                                                               6C726471 6C726478 4C524447 4C524448 %...%...<...<...
                                                                               4C4D3242 4C524441 4C52444E 4C524465 <(..<...<..+<...
                                                                               4C524457 434E4D45 4C524431 41435442 <....+(.<.......
                                                                               4C524451 4C4D493B                   <...<(..

 FRLY-CBP                  05 00 1E  NDPSA RDI STA STATE (A109)     3E00 0026  40000000 00011000 00020A04 04003E00  ..............
                                                                               1004002E 05046100 14019093 36FC0000 ....../....l....
                                                                               00002000 00004B80 02201E00 00000000 ................
                                                                               0F102000 00302080 0012C09C 005FF110 .............¬1.
                                                                               A1090000 00260000 00000000 C35FF110 ............C¬1.
                                                                               40302080 01070986 33650101 07000600  ......f........
                                                                               000C0600 80008000 10D40000 02040258 .........M......
                                                                               40000000 00120404                    .......
                                     FLAGS (2000) CSS.LRID (302080) STA STATE (A109)
                                     DATA FOLLOWS
```

Figure 10. Frame-relay data, CSS adapter trace sample report

ISDN data, CSS adapter trace sample report

```
          VTAM                                ADVANCED COMMUNICATIONS FUNCTION
                                                     TRACE ANALYSIS PROGRAM
                                          CONNECTIVITY SUBSYSTEM ADAPTER TRACE (CAPRT)        DATE: mm:dd:yyyy

                        .HOST LINK   4
                        |  .HOST STATION   5
                        |  |  .ADAPTER-ID   6
                        |  |  |  .LINE-ADDRESS   7
                        |  |  |  |  .CBA-ID   8
RECORD/     ELEM        |  |  |  |  |            9                                                                    13
  TYPE      ADDR        V  V  V  V  V         COMMAND QUALIFIER        TIME SEQ          HEX                          TRANSLATION
 2            3                                                          10   11          12

000036      00F4
 ISDN-XMIT                            ISDN LAPD XMIT                D1A9       002D0000 20080001 00000802 000105A1 ................
                                                                               04028890 1801A36C 08803737 37313030 ..H...T%........
                                                                               306D0280 00700880 37373732 30303071 ._..............
                                                                               028000                              ...

000040      00F4
 ISDN-XMIT                            ISDN LAPD XMIT                D1AA       002D0000 20080001 02000802 000205A1 ................
                                                                               04028890 1801A36C 08803737 37313030 ..H...T%........
                                                                               306D0280 03700880 37373732 30303071 ._..............
                                                                               028000                              ...

000043      00F4
 ISDN-XMIT                            ISDN LAPD XMIT                D1AA       002D0000 20080001 04000802 000305A1 ................
                                                                               04028890 1801A36C 08803737 37313030 ..H...T%........
                                                                               306D0280 04700880 37373732 30303071 ._..............
                                                                               028000                              ...

000047      00F4
 ISDN-XMIT                            ISDN LAPD XMIT                D1AB       002D0000 20080001 06000802 000405A1 ................
                                                                               04028890 1801A36C 08803737 37313030 ..H...T%........
                                                                               306D0280 05700880 37373732 30303071 ._..............
                                                                               028000                              ...

000053      00F4
 ISDN-XMIT                            ISDN LAPD XMIT                D1AB       002D0000 20080001 08000802 000505A1 ................
                                                                               04028890 1801A36C 08803737 37313030 ..H...T%........
                                                                               306D0280 06700880 37373732 30303071 ._..............
                                                                               028000                              ...

000056      00F4
 ISDN-XMIT                            ISDN LAPD XMIT                D1AC       002D0000 20080001 0A000802 000605A1 ................
                                                                               04028890 1801A36C 08803737 37313030 ..H...T%........
                                                                               306D0280 07700880 37373732 30303071 ._..............
                                                                               028000                              ...

000057      00F4
 ISDN-RECV                            ISDN LAPD RECV                D1AC       000E2100 20010201 000A0802 80010218 ................
                                                                               03A9839F                            .ZC.
                                                                               37D80017 D1AC0000 00000001 00040001 .Q..J...........
                                                                               20080402 010102                     .......
```

Figure 11. ISDN data, CSS adapter trace sample report

Token-ring data, CSS adapter trace sample report

```
                                                                1
          VTAM                                ADVANCED COMMUNICATIONS FUNCTION
                                                     TRACE ANALYSIS PROGRAM
                                          CONNECTIVITY SUBSYSTEM ADAPTER TRACE (CAPRT)    DATE: mm:dd:yyyy            PAGE: 00001
                         .HOST LINK   4
                         |  .HOST STATION   5
                         |  |  .ADAPTER-ID   6
                         |  |  |  .LINE-ADDRESS   7
                         |  |  |  |  .CBA-ID   8
RECORD/     ELEM         |  |  |  |  |              9                                                                    13
  TYPE      ADDR         V  V  V  V  V         COMMAND QUALIFIER        TIME SEQ          HEX                          TRANSLATION
2            3                                                           10   11          12

000005      0012
 TRA-CDIM                                CDIM MSG (TIME OUT)            22A0       01102D1E FC80CF04 04                .........

 TRA-CPLR                                XMT RR   .C,P,      ,NR=74     22A0       03014000 00000001 10005A90 97D18405 .. .......!.pJd.
                                                                                    00000A00 00000000 00000A00 00000000 ................
                                                                                    00120080 00401000 5A9097D1 40000000 ..... ..!.pJ ...
                                                                                    00018080 01E9                       .....Z
                                         TYPE (LLC FRAME) LMAC (400000000001) RMAC (10005A9097D1) 14
                                         CONTROL FIELD (01E9)

 TRA-CPLR                                END OF TRANSMISSION            22A0       01DF7B01 10000000 0070D536 FC000100 ..#.......N.....
                                                                                    00050000 00                         .....

 TRA-CPLR                                RCV RR   ,R,F      NR=48       22A0       01000100 00815900 0000005E 8E0E0000 .....a.....;....
                                                                                    12140010 40400000 00000110 005A9097 ....  .......!.p
                                                                                    D1808101 91                         J.a.j
                                         LMAC (400000000001) RMAC (10005A9097D1)
                                         CONTROL FIELD (0191)

000009      0012
 TRA-CDIM                                CDIM MSG (TIME OUT)            23A0       01102D1E FC80CF04 04                .........

 TRA-CPLR                                XMT RR   .C,P,      NR=74      23A0       03014000 00000001 10005A90 97D18405 .. .......!.pJd.
                                                                                    00000A00 00000000 00000A00 00000000 ................
                                                                                    00120080 00401000 5A9097D1 40000000 ..... ..!.pJ ...
                                                                                    00018080 01E9                       .....Z
                                         TYPE (LLC FRAME) LMAC (400000000001) RMAC (10005A9097D1)
                                         CONTROL FIELD (01E9)

 TRA-CPLR                                END OF TRANSMISSION            23A0       013F7C01 10000000 0070DB36 FC000100 ..@............
                                                                                    00080000 00                         .....

 TRA-CPLR                                RCV RR   .R,F,      NR=48      23A0       01000100 00815A00 0000004E 6E0E0000 .....a!....+>...
                                                                                    12140010 40400000 00000110 005A9097 ....  .......!.p
                                                                                    D1808101 91                         J.a.j
                                         LMAC (400000000001) RMAC (10005A9097D1)
                                         CONTROL FIELD (0191)

000011      0012
 TRA-CDIM                                CDIM MSG (TIME OUT)            24A0       01102D1E FC80CF04 04                .........

 TRA-CPLR                                XMT RR   .C,F,      NR=74      24A0       03014000 00000001 10005A90 97D18405 .. .......!.pJd.
                                                   15                               00000A00 00000000 00000A00 00000000 ..... ...........
                                                                                    00120080 00401000 5A9097D1 40000000 ..... ..!.pJ ...
                                                                                    00018080 01E9                       .....Z
                                         TYPE (LLC FRAME) LMAC (400000000001) RMAC (10005A9097D1)
                                         CONTROL FIELD (01E9)

 TRA-CPLR                                END OF TRANSMISSION            24A0       018C7C01 10000000 0040E036 FC000100 ..@..... ......
                                                                                    00080000 00                         .....
```

Figure 12. Token-ring data, CSS adapter trace sample report

CSS line trace report

The selection parameter is CSPRT, which applies to NCP V6R2 and later releases.

Figure 13 on page 181 shows a sample report.

Table 25 on page 179 describes the column headers and the trace data contained in this report type. To locate this information about the sample reports, match the numbers (n) listed in this table to the corresponding numbers (n) shown in the sample reports.

Table 25. Report description legend for CSS line trace reports

Reference number (n)	Report column headers and the trace data
1	The page heading contains the report name, report parameter, and the date the report was printed or displayed.
2	**RECORD/MESSAGE** The record is the ACF/TAP-assigned sequence number of the physical line trace record that ACF/TAP was processing when this line was printed. The message number is an ACF/TAP assigned number that identifies the PIU for correlation with SNA detail and SNA summary reports.

Table 25. Report description legend for CSS line trace reports (continued)	
Reference number (n)	**Report column headers and the trace data**
3	**TYPE** For CSS type line trace entries, this field always contains CSS.
4	**LINE ADDRESS** The element address of the physical line that was being traced.
5	**LOGICAL LINE** The element address of the logical line being traced. For physical line trace entries, the log line field contains a zero value.
6	**ID** Identifies the control block that is displayed in the trace entry. **ECB** Extended control block flag byte. **LDPSA** CSS processor-to-NCP parameter dynamic status area **LPARM** CSS processor-to-NCP status area **LPSA** CSS processor-to-NCP parameter status area **LSTAT** CSS processor-to-NCP status area **NDPSA** NCP-to-CSS processor dynamic status area **NPARM** NCP-to-CSS processor parameter area **NDPSA** NCP-to-CSS processor parameter status area **NSTAT** NCP-to-CSS processor status area **RDATA** Receive data **XDATA** Transmit data
7	**COMMAND QUALIFIER** The command and qualifier being processed when the trace record was written.
8	**TIME** The relative elapsed time (in hexadecimal) between the entries to the nearest 100 milliseconds. The time is measured from the activation of the trace to the level 2 interrupt represented by each entry.
9	**SEQ** The sequence counter from the control block being displayed.
10	**HEX** The hexadecimal trace entry from the control block.

Table 25. Report description legend for CSS line trace reports (continued)	
Reference number (n)	**Report column headers and the trace data**
11	**TRANSLATION** This is the EBCDIC equivalent of the hexadecimal trace data.
12	Pertinent fields extracted from the preceding trace entry and displayed on a separate line as field names, followed by their corresponding values in parentheses.

For a detailed description of the column headers and trace data, reference the numbers (n) shown on the sample report to the corresponding numbers (n) listed in Table 25 on page 179.

For more information about gathering data for this trace, see Chapter 2, “Gathering host-collected trace data,” on page 7.

CSS line trace sample report

```
          VTAM                                ADVANCED COMMUNICATIONS FUNCTION
                                                     TRACE ANALYSIS PROGRAM
          DATE: mm:dd:yyyy                  CONNECTIVITY SUBSYSTEM LINE TRACE (CSPRT)                                PAGE: 00001

   2        3     4     5       6         7                  8   9                     10                          11
RECORD/          ELEM  LOG
  MESSAGE  TYPE  ADDR  ADDR   ID   COMMAND QUALIFIER        TIME SEQ                  HEX                     TRANSLATION

000034           01E0
  000333   CSS                XDATA                                        40000002 200004E4 0000002B 0000002A *  ......U........
                                                                          1C000001 000002D2 06090B00 00010383 * .......K.......c
                                                                          01E00D00 FF41A000 7CE3C4            * ........@TD

           CSS                NSTAT EXECUTE CLEAR - POS       A2         88000000 00000000 00000000 6F141734 * h...........?...

           CSS                NPARM EXECUTE REQUEST           A4  0350   80194620 03500000 00000000 0A020000 * .....&..........

           CSS          01E4  NDPSA PIU                       A4  0351   00000000 0C010000 00000001 003A6D84 * ..............._d
                                                                          00000000 00000000 03510000 007F5A0C * ..............".!.
                              FLAGS (0000) CSS.LRID (000001) NCP.LRID (7F5A0C)  ACK COUNT (00)  12

           CSS                ECB                             A4         02                                  * .

000035           01E0
  000334   CSS                XDATA                                        40000002 200084E5 0000002B 0000002A *  .....dV........
                                                                          1C000001 000002D3 075E0B00 00010383 * .......L.;.....c
                                                                          01E089A2 E701A000 7CE3C4            * ..isX...@TD

           CSS                NSTAT EXECUTE CLEAR - POS       A4         88000000 00000000 00000000 6F141734 * h...........?...

           CSS                NPARM EXECUTE REQUEST           A6  0351   80194620 03510000 00000000 0A020000 * ................

           CSS          01E4  NDPSA PIU                       A6  0352   00000000 0C010000 00000001 003BB358 * ................
                                                                          00000000 00000000 03520000 007F5A0C * ..............".!.
                              FLAGS (0000) CSS.LRID (000001) NCP.LRID (7F5A0C)  ACK COUNT (00)  12

           CSS                ECB                             A6         02                                  * .

  000335   CSS                XDATA                                        40000002 200004E6 0000002B 0000002A *  ......W........
                                                                          1C000001 000002D4 06CB0B00 00010383 * .......M.......c
                                                                          01E00D03 FF41A000 7CE3C4            * ........@TD

           CSS                ECB                             A6         42                                  * .

  000336   CSS                XDATA                                        40000002 200004E7 0000002B 0000002A *  ......X........
                                                                          1C000001 000002D5 06B20B00 00010383 * .......N.......c
                                                                          01E00D03 FF41A000 7CE3C4            * ........@TD

           CSS                NSTAT EXECUTE CLEAR - POS       A6         88000000 00000000 00000000 6F141734 * h...........?...
```

Figure 13. CSS line trace sample report

Frame-relay logical line trace summary report

The selection parameter is FRPRT.

Figure 14 on page 183 shows a sample report.

This topic contains a legend for interpreting frame-relay logical line trace summary report information in a sample report.

Table 26 on page 182 describes the column headers and the trace data contained in this report type. To locate this information about the sample reports, reference the numbers (n) listed in this table to the corresponding numbers (n) shown in the sample report.

Table 26. Report description legend for frame-relay logical line trace summary reports	
Reference number (n)	**Report column headers and the trace data**
1	The page heading contains the report name, report parameter, and the date the report was printed or displayed.
2	**MESSAGE NUMBER** This is a cross-reference to message numbers in other ACF/TAP reports.
3	**ELEMENT NUMBER** This is a cross-reference to element numbers in other ACF/TAP reports.
4	**LINE ADDR** The element address of the physical line that was being traced.
5	**Address and control information:** **CMND** Command **CNTL** Control bytes **DLCI** Data Link connection identifier **IDENT** Element identifier **NR** Number received **NS** Number sent **PF** Poll/final **TIME** Timestamp
6	**HEX:** The trace data for the line trace element, in hexadecimal.
7	**DATA TRANSLATION/EXCEPTION STATUS** This is the EBCDIC equivalent of the hexadecimal trace data.

For more information about gathering data for this trace, see Chapter 2, “Gathering host-collected trace data,” on page 7.

Frame-relay logical line trace summary sample report

```
                                                                1
          VTAM                                   ADVANCED COMMUNICATIONS FUNCTION
                                                       TRACE ANALYSIS PROGRAM
          DATE: mm:dd:yyyy                       FR LOGICAL LINE TRACE SUMMARY (FRPRT)                      PAGE: 00001

    2       3     4    5                                                          6                                7
MESSAGE ELEMENT LINE                                                                                   DATA TRANSLATION/
NUMBER  NUMBER  ADDR  DLCI   CNTL  NR  NS  PF  CMND  TIME    IDENT                HEX                   EXCEPTION STATUS

000001  000001  0028  0010    000002 RECEIVE-READY,   000000 RECEIVE-NOT-READY ELEMENTS SUPPRESSED
000003  000003  0028  0010   C4C2  61  62      INFO  C92B    DATAX   06010308 4C807081 0404C4C2 48000000 * ....<..a..DB....
                                                                    00620000 00000047 0000000C 1D000000 * ................
                                                                    00000000 00282B00 000B0000 010001FF * ................
                                                                    00000001 40000000 000BFF00 082A0000 * .... ...........
                                                                    00000000 0000B08D F9AF6B1E 4201     * ........9.,...
000004  000004  0028  0010   C2C6  63  61      INFO  C92B    DATAR   04010308 4C807081 0404C2C6 48000000 * ....<..a..BF....
                                                                    00610000 0000000C 00000047 1D000000 * ./..............
                                                                    00000000 00342B00 000C0000 010003FF * ................
                                                                    00000001 00000000 000BD000 082A082A * ................
                                                                    00000000 0000B08D F9AF6B1E 42010000 * ........9.,.....
                                                                    00000001 00000000 0100              * ..........
000005  000005  0028  0010   C6C4  62  63      INFO  C92E    DATAX   06010308 4C807081 0404C6C4 48000000 * ....<..a..FD....
                                                                    00630000 00000001 0000000B 1D000000 * ................
                                                                    00000000 00162B80 000D0000 0100D000 * ................
                                                                    80000000 002D000F 00000000          * ...........
000006  000006  0028  0010   C4C8  64  62      INFO  C92E    DATAR   04010308 4C807081 0404C4C8 48000000 * ....<..a..DH....
                                                                    00624000 0000000B 00000001 1D000000 * .. .............
                                                                    00000000 0004AB80 000D              * ..........
000007  000007  0028  0010   C8C6  63  64      INFO  C930    DATAX   06010308 4C807081 0404C8C6 41000000 * ....<..a..HF....
                                                                    10644000 00000001 0000000B 1D000000 * .. .............
                                                                    00000000 0000                       * ......
000008  000008  0028  0010   CAC6  63  65      INFO  C933    DATAX   06010308 4C807081 0404CAC6 40000000 * ....<..a...F ...
                                                                    20658000 00000001 0000000B 1D000033 * ................
                                                                    004004BF 006A6B80 00310103 03B1A030 * . ....,.........
                                                                    42008700 00870000 00000000 00000000 * ..g..g..........
                                                                    00000000 07C5C3C8 D6C1F1F1 000007C5 * .....ECHOA11...E
                                                                    C3C8D6C1 F0F16012 D9B38956 242B85CD * CHOA01-.R.i...e.
                                                                    09D5C5E3 C14BC1F1 F1D50E0D F3D5C5E3 * .NETA.A11N..3NET
                                                                    C14BC5C3 C8D6C1F1 F12C0A01 08404040 * A.ECHOA11....
                                                                    40404040 402D0908 C9D5E3C5 D9C1C3E3 *      ...INTERACT
000009  000009  0028  0010   C6CC  66  63      INFO  C933    DATAR   04010308 4C807081 0404C6CC 41000000 * ....<..a..F.....
                                                                    10634000 0000000B 00000001 1D000000 * .. .............
                                                                    00000000 0000                       * ......
000010  000010  0028  0010   C8CC  66  64      INFO  C934    DATAR   04010308 4C807081 0404C8CC 40000000 * ....<..a..H. ...
                                                                    20648000 0000000B 00000001 1D000040 * ................
                                                                    003304BF 0036EB80 00310100 00000000 * ................
                                                                    02008000 00800000 00000000 00000000 * ................
                                                                    00000000 00000000 6012D9B3 8956242B * ........-.R.i...
                                                                    85CD09D5 C5E3C14B C1F1F1D5          * e..NETA.A11N
000011  000011  0028  0010   CCCA  65  66      INFO  C935    DATAX   06010308 4C807081 0404CCCA 41000000 * ....<..a........
                                                                    10664000 00000001 0000000B 1D000000 * .. .............
                                                                    00000000 0000                       * ......
000012  000012  0028  0010   CACE  67  65      INFO  C937    DATAR   04010308 4C807081 0404CACE 40000002 * ....<..a.... ...
                                                                    00650000 0000000C 00000047 1D000000 * ................
                                                                    00000000 002A2B00 00090000 010001FF * ................
                                                                    0000000B 00000000 0001FF00 082A0000 * ................
                                                                    00000001 00010003 8DE1BE00 800000C4 * ..............D
000013  000013  0028  0010   CECC  66  67      INFO  C937    DATAX   06010308 4C807081 0404CECC 48000001 * ....<..a........
                                                                    00670000 00000001 0000000B 1D000000 * ................
                                                                    00000000 00162B80 000D0000 0100D000 * ................
                                                                    80000000 002D000F 00000000          * ...........
```

Figure 14. Frame-relay logical line trace summary sample report

GPT index report

The selection parameter is IXPRT.

Requirement: A system sort program is required to produce this report.

Figure 15 on page 185 shows a sample report.

This topic contains a legend for interpreting GPT index report information.

Table 27 on page 183 describes the column headers and the trace data contained in this report type. To locate this information about the sample reports, reference the numbers (n) listed in this table to the corresponding numbers (n) shown in the sample report.

Table 27. GPT index report

Reference number (n)	Report column headers and the trace data
1	The page heading contains the report name, report parameter, and the date the report was printed or displayed.
2	**SESSION** This column specifies SESSION for session data or an index number (*nnnnnnnn*) that is the record number containing the function management header 5 (FMH5).

Table 27. GPT index report (continued)	
Reference number (n)	**Report column headers and the trace data**
4	**PCID** The procedure correlation ID that uniquely identifies the session. This item also appears if the column header appears as an index number.
When the column header displays as session, the following information appears on the report:	
3	The address pair of the dummy bind.
5	The fully qualified control point name consisting of the network ID and the SSCP name.
When the column header appears as an index number, the following information appears:	
6	The address pair of the attached FMH5.
7	**TPN** The transaction program name, with its EBCDIC translation directly beneath it.
8	**LU NAME** The network name of the logical unit that initiated the conversation.
9	**CONV CORR** The conversation correlator (if present).
10	**FMH5** Functional management header 5.

Notes:

1. If your NCP does not support type 2.1 nodes, when you activate the GPT for a logical unit, NCP traces all PIUs flowing to and from that logical unit. For LU-LU session traffic, this trace is limited to the PIUs flowing over the single allowable LU-LU session for that logical unit.
2. If your NCP supports type 2.1 nodes and multiple sessions, when you activate GPT for an independent logical unit, NCP traces all PIUs flowing to and from that logical unit for the multiple allowable LU-LU sessions for those independent logical units. Each session can be between the same logical unit end points (parallel sessions) or different logical unit end points.

   Previously, NCP traced only the single conversation as it flowed over the single LU-LU session. For independent logical units, NCP can trace the multiple conversations as they flow over the unit's multiple sessions.
3. To select and format single conversations of independent logical units specify IXPRT=YES. This produces the index, which shows session initiation and identification (dummy binds, which contain the network address pair and fully qualified PCID). The index also contains conversation allocations (FMH5s) grouped by session. Each function management header 5 (FMH5) is accompanied by its ACF/TAP record number that isolates the conversation to be formatted.
4. To format a single conversation, re-run ACF/TAP using the parameters IXPRT=NO, INPUT=GPT (or ALL), and INDEX set to the ACF/TAP record number of the appropriate FMH5. See “INDEX parameter” on page 41 for more information about the INDEX parameter. Activate the GPT specifically on the independent logical unit to obtain the dummy binds that you need to produce the data file that is processed for the index report.

For more information about gathering data for this trace, see Chapter 2, “Gathering host-collected trace data,” on page 7.

GPT index sample report

```
                                                                  1
          VTAM                                  ADVANCED COMMUNICATIONS FUNCTION
                                                       TRACE ANALYSIS PROGRAM
          DATE: mm:dd:yyyy                              INDEX REPORT (IXPRT)                                Page: 00001
 INDEX ***********************************************************************************************************************

                                3                                   4                   5
   2        |----------------------------------------|   |--------------------|  |------------------------|
SESSION      OAF-EF(00000004 005F) DAF-EF(0000000C 0062)   PCID(271F2E0F14F3BDED)  CP NAME(NET1    .I04002AA)
00001326                          OAF-EF(00000004 005F) DAF-EF(0000000C 0062)   PCID(271F2E0F14F3BDED)
                                  TPN      (06F1)
                                           * 1*
           FMH5     40000300  20000000  0000000C  00000004  1E000062  005F0001  00100A91  000D0502  FF0003D0  00000206
                    F100
SESSION      OAF-EF(00000004 0060) DAF-EF(0000000C 0062)   PCID(271F2E0F14F3BDEE)  CP NAME(NET1    .I04002AA)
SESSION      OAF-EF(00000004 0061) DAF-EF(00404040 0062)   PCID(4040404040404040)  CP NAME(  T1    .I04002AA)
SESSION      OAF-EF(00000004 005E) DAF-EF(0000000C 0061)   PCID(EC4749259D2C5695)  CP NAME(NET1    .NET1CD12)

                                                  6
    2                             |----------------------------------------|
00001671                          OAF-EF(0000000C 0061) DAF-EF(00000004 005E)   PCID(EC4749259D2C5695)
                                    7
                                  TPN      (06F1)
                                           *F1*
                                    8
                                  LU NAME  (CICS12  )
                                    9
                                  CONV CORR(60F9F9F9)
             10
           FMH5     40000201  00038005  00000004  0000000C  1C00005E  00610002  00400B95  A0240502  FF0003D0  00000206
                    F1001108  C3C9C3E2  F1F24040  533A0314  73AC0001  0460F9F9  F900
SESSION      OAF-EF(00000004 005E) DAF-EF(0000000C 0075)   PCID(EC4749259D2C5696)  CP NAME(NET1    .NET1CD12)
00001672                          OAF-EF(0000000C 0075) DAF-EF(00000004 005E)   PCID(EC4749259D2C5696)
                                  TPN      (C5E5D6D2E3E2E3C14BC9C3C6D3C9C2D9)
                                           *EVOKTSTA.ICFLIBR*
                                  LU NAME  (CICS12  )
                                  CONV CORR(60F9F9F7)
           FMH5     40000201  00038008  00000004  0000000C  1C00005E  00750002  00350A95  80320502  FF0003D1  000010C5
                    E5D6D2E3  E2E3C14B  C9C3C6D3  C9C2D900  1108C3C9  C3E2F1F2  40405318  70425AB6  00010460  F9F9F700
```

Figure 15. GPT index sample report

GPT summary report

The selection parameter is GSPRT.

This topic contains a legend for interpreting GPT summary report information.

Figure 16 on page 187 shows a summary report.

Table 28 on page 185 describes the column headers and the trace data contained in this report type. To locate this information about the sample reports, reference the numbers (n) listed in this table to the corresponding numbers (n) shown in the sample reports.

Table 28. GPT summary report

Reference number (n)	Report column headers and the trace data
1	The page heading contains the report name, report parameter, and the date the report was printed or displayed.
2	**RECORD/ELEMENT** The record and element number in the trace record.
3	**COMMAND** The decoded request/response unit command.

Table 28. GPT summary report (continued)	
Reference number (n)	**Report column headers and the trace data**
4	**RQ/RSP** The setting of the request/response indicator in the request header of a data entry: **Q** Request **S** Response **+** Positive response **-** Negative response
5	**RESOURCE ID (LINK CLST RSRC)** The resource ID of the entry's resource.
6	DATA/STATUS: **D** Data entry **S** Status entry For more information about status entries, see message DSJ206I in Appendix A, “Messages,” on page 57. The message DR RESOURCE appears for status entries when the resource for which the status record was generated is dynamically reallocatable. Even though the generation definition can generate an LU 6.2's address, VTAM can also dynamically create or delete additional addresses for the LU 6.2 as parallel sessions are added or deleted. Therefore, DR RESOURCE could appear for an LU 6.2 even when the generation definition determined its address. See Table 4 on page 12 for more information about tracing parallel LU 6.2 sessions.
7	**GPT trace text** A status entry is in character format and the data entry text in hexadecimal format and can be up to and including 44 bytes of the traced PIU. The transmission header, request header, and request/response unit are separated by blanks.
8	The resource type for the status entries.

For more information about gathering data for this trace, see Chapter 2, “Gathering host-collected trace data,” on page 7.

GPT summary sample report

```
                                                                  1
          VTAM                                   ADVANCED COMMUNICATIONS FUNCTION
                                                        TRACE ANALYSIS PROGRAM
          DATE: mm:dd:yyyy                       GENERALIZED PIU TRACE SUMMARY (GSPRT)   NCPNAME=SY3604C       PAGE: 00001
    2        3      4          5            6
RECORD/            RQ/   RESOURCE ID    DATA/
 ELEMENT  COMMAND  RSP  LINK CLST RSRC  STATUS
                                                 7                                     8
0001326
 0000001                0007 0038 005E  S 40      START                                                                  SNA LU
 0000002                0007 0038 005F  S 44      START                                 DR RESOURCE                      SNA LU
 0000003 BIND        Q  0007 0038 005F  D 4000030020000000000000000C000000041F000062005F00000076 6B8000 31001307B0B050B3008485
 0000004 BIND       +S  0007 0038 005F  D 4000020000018000000000040000000C1D00005F006200000058 EB8000 31001307B0B050B3008085
 0000005                0007 0038 005F  S 00                                                                             SNA LU
 0000006 ATTACH      Q  0007 0038 005F  D 4000030020000000000000000C000000041E000062005F00010010 0A9100 0D0502FF0003D000000206F100
0001327
 0000007 IPR/IPM    +S  0007 0038 005F  D 4000020000010001000000040000000C1F00005F006200010006 830100 0D0004
 0000008             Q  0007 0038 005F  D 4000030020000000000000000C000000041E000062005F0002001C 019120 001912100200000 1000004
 0000009 IPR/IPM    +S  0007 0038 005F  D 4000020000018002000000040000000C1F00005F006200020006 830100 010004
 0000010             Q  0007 0038 005F  D 4000020000010003000000040000000C1C00005F00620001001C 039101 001912100A000001000004
0001328
 0000011 IPR/IPM    +S  0007 0038 005F  D 4000030020000000000000000C000000041D000062005F00000006 830100 000002
 0000012 BIS         Q  0007 0038 005F  D 4000030020000000000000000C000000041E000062005F00030004 4B9000 70
 0000013 BIS         Q  0007 0038 005F  D 4000020000018004000000040000000C1C00005F006200020004 4BB500 70
0001355
 0000014 IPR/IPM    +S  0007 0038 005F  D 4000030020000000000000000C000000041D000062005F00000006 830100 000003
 0000015                0007 0038 0060  S 44      START                                 DR RESOURCE                      SNA LU
 0000016 UNBIND      Q  0007 0038 005F  D 4000030020000000000000000C000000041F000062005F00000021 6B8000 32010000000006016271F2E
 0000017 BIND        Q  0007 0038 0060  D 4000030020000000000000000C000000041F00006200600000076 6B8000 31001307B0B050B3008487
 0000018                0007 0038 0061  S 44      START                                 DR RESOURCE                      SNA LU
 0000019 UNBIND     +S  0007 0038 005F  D 4000020000010005000000040000000C1D00005F006200000004 EB8000 32
0001356
 0000020 BIND        Q  0007 0038 0061  D 4000030020000000000000000C000000041F00006200610000076 6B8000 31001307B0B050B3008487
 0000021                0007 0038 005F  S 24             STOP                           DR RESOURCE                      SNA LU
 0000022 BIND       +S  0007 0038 0060  D 4000020000018006000000040000000C1D00006000620000058 EB8000 31001307B0B050B3008085
 0000023                0007 0038 0060  S 00                                                                             SNA LU
 0000024 BIND       +S  0007 0038 0061  D 4200020000010007000000040000000C1D00006100620000058 EB8000 31001307B0B050B3008085
```

Figure 16. GPT summary sample report

LAN line trace reports

The selection parameter is NTPRT.

This topic contains LAN line trace reports. See the following figures:

- Figure 17 on page 189
- Figure 18 on page 190
- Figure 19 on page 190
- Figure 20 on page 191
- Figure 21 on page 191

This topic contains a legend for interpreting LAN line trace report information.

ACF/TAP formats data for the user-specified logical line address if either the DA and DSAP data, or the SA and SSAP data, matches the values specified on the LLN parameter. You can specify 1 logical line address or ALL.

Table 29 on page 187 describes the column headers and the trace data contained in this report type. To locate this information about the sample reports, reference the numbers (n) listed in this table to the corresponding numbers (n) shown in the sample reports.

Table 29. LAN line trace report

Reference number (n)	Report column headers and the trace data
1	The page heading contains the report name, report parameter, and the date the report was printed or displayed.
2	**RECORD/ELEMENT** Cross-reference to the data with the line trace detail and the SYSPRINT reports.

Table 29. LAN line trace report (continued)	
Reference number (n)	**Report column headers and the trace data**
3	**LINE ADDRESS/TYPE** The address of the physical line and the type of element traced: • For ESS data, the following addresses apply: – ENET ARP – ENET IP – 802.3 – 802.3 ARP – 802.3 IP • For NTRI data, the following addresses apply: – NTRI PHY – NTRI LOG • For IP data, the following addresses apply: – T-R ARP – T-R IP
4	**R/T** Indicates whether the element is a receive (R) or transmit (T) element.
5	**DA Destination address** This destination address and the destination system access point (DSAP) make up the logical destination address.
6	**SA Source Address** This source address and the source system access point (SSAP) make up the logical source address.
7	**DSAP** This is the destination system access point. For ESS data, this field contains X'AA' for 802.3 snap encapsulated; otherwise it is blank. For IP data, this field also contains X'AA'.
8	**SSAP** This is the source system access point. For ESS data, this field contains X'AA' for 802.3 snap encapsulated; otherwise, it is blank. For IP data, this field also contains X'AA'
9	**NS** Transmitter send-sequence number valid only for I-frames. For ESS or IP data, this field is blank.
10	**NR** Transmitter receive-sequence number valid only for I-frames and S-frames. For ESS or IP data, this field is blank.

Table 29. LAN line trace report (continued)	
Reference number (n)	**Report column headers and the trace data**
11	**RI** Indicates whether routing information is present. For ESS data, this field is blank. **Y=** Represents Yes, and the routing information is present. **N=** Represents No, and the routing information is not present.
12	**C/R** This field indicates whether the data is a command (C) or response (R). For ESS data or IP data, this field is blank.
13	**P/F** An S in this field indicates the poll or final bit are set; otherwise, the field is blank. For ESS or IP data, this field is blank.
14	**CMD** Interpretation of a U-frame or S-frame command or response. For ESS or IP data, this field is blank.
15	**TIME** The chronological order for frames that have been processed. This is an NCP internal time and not the system time. The format is *mmm*:*ss*.*t*, where *mmm* is minutes, *ss* is seconds, and *t* is tenths of seconds. Because the TIME stamp is contained in a 2–byte field, the highest possible value is 109:13.5. A time stamp one-tenth of a second later wraps to 0:00.0. The TIME value appears only in LAN line trace data for logical lines.
16	**HEX** A hexadecimal dump of the trace element.

ESS data, LAN line trace sample report

```
                                                                  1
          VTAM                                   ADVANCED COMMUNICATIONS FUNCTION
                                                      TRACE ANALYSIS PROGRAM
           DATE: mm:dd:yyyy                        LAN LINE TRACE REPORT (NTPRT)                          PAGE: 00001
     RECORD DATE: 01.27.1998    TIMESTAMP: 09.58.53.496235
  2          3       4   5            6           7    8    9   10    11  12  13  14     15
RECORD/    LINE ADDR/
  ELEMENT    TYPE    R/T DA            SA          DSAP SSAP NS  NR   RI C/R P/F  CMD   TIME          HEX   16

000004       005D
  000005   802.3 ARP  R  0200482C6A8E  10005A824974  AA  AA                                      0200482C 6A8E1000 5A824974 0024AAAA
                                                                                                 03000000 08060006 08000604 00210000
                                                                                                 5A824974 AB010102 40007CE3 C4
  000008   802.3 IP   R  0200482C6A8E  10005A824974  AA  AA                                      0200482C 6A8E1000 5A824974 003AAAAA
                                                                                                 03000000 08004500 003257B5 0000FF01
                                                                                                 AD10AB01 01020A01 01017CE3 C4

000005       005D
  000011   ENET ARP   T  FFFFFFFFFFFF  0200482C6A8E                                              FFFFFFFF FFFF0200 482C6A8E 08060001
                                                                                                 08000604 00010200 482C6A8E AB010101
                                                                                                 00000000 0000AB01 01027CE3 C4
  000014   802.3 ARP  T  FFFFFFFFFFFF  0200482C6A8E  AA  AA                                      FFFFFFFF FFFF0200 482C6A8E 0024AAAA
                                                                                                 03000000 08060006 08000604 00010200
                                                                                                 482C6A8E AB010101 00007CE3 C4

000008       005D
  000038   802.3 IP   T  10005A824974  0200482C6A8E  AA  AA                                      10005A82 49740200 482C6A8E 003AAAAA
                                                                                                 03000000 08004500 003204D2 00003B01
                                                                                                 C3F40A01 0101AB01 01027CE3 C4

000009       005D
  000041   ENET ARP   R  0200482C6A8E  10005A825AD7                                              0200482C 6A8E1000 5A825AD7 08060001
                                                                                                 08000604 00021000 5A825AD7 AB010103
                                                                                                 40001234 5671AB01 01017CE3 C4
  000043   ENET IP    R  0200482C6A8E  10005A825AD7                                              0200482C 6A8E1000 5A825AD7 08004500
                                                                                                 003264CB 0000FF01 9FF9AB01 01030A01
```

Figure 17. ESS data, LAN line trace sample report

Frame-relay over token-ring data, LAN line trace sample report

```
                                                                  1
            VTAM                                   ADVANCED COMMUNICATIONS FUNCTION
                                                        TRACE ANALYSIS PROGRAM
             DATE: mm:dd:yyyy                         LAN LINE TRACE REPORT (NTPRT)                        PAGE: 00001
       RECORD DATE: 01.27.1998    TIMESTAMP: 09.58.53.496235
  2          3       4   5            6           7    8    9   10    11  12  13  14     15
RECORD/    LINE ADDR/
  ELEMENT    TYPE    R/T DA            SA          DSAP SSAP NS  NR   RI C/R P/F  CMD   TIME          HEX   16

000022       002A
  000011   NTRI PHY   T  000000000000  400000000043  00  04           N   C   S  TEST            40260004 00044000 C1172912 78001004
                                                                                                   00400000 00000000 40000000 00430004
                                                                                                   F3FFFFFF FFFFFF13 F97CFFFF FFFFFFFF
                                                                                                   FFFFFFFF FFFFFFFF FFFFFFFF FFFFFFFF
                                                                                                   FFFFFFFF FFFFFFFF FFFFFFFF FFFFFFFF
                                                                                                   FFFFFFFF FFFFFFFF FFFFFFFF FFFFFFFF
                                                                                                   FFFFFFFF FFFFFFFF FFFFFFFF FFFFFFFF
                                                                                                   FFFFFFFF FFFFFFFF FFFFFFFF FFFFFFFF
                                                                                                   FFFFFFFF FFFFFFFF FFFFFFFF FFFFFFFF
                                                                                                   FFFFFFFF FFFFFFFF FFFFFFFF FFFFFFFF
                                                                                                   FFFFFFFF FFFFFFFF FFFFFFFF
000024       002A
  000025   T-R FRLY   T  400000000034  400000000043  00  C4           N   C      TEST            40291F2C 00044000 C1172936 78001004
                                                                                                   00404000 00000034 40000000 004300C4
                                                                                                   F300173D 48000000 10
  000027   T-R FRLY   R  400000000043  400000000034  00  C4           N   C      TEST            40172834 00268004 C1172836 70001006
                                                                                                   00404000 00000043 40000000 003400C4
                                                                                                   F300173C 94000000 10000000 00000000
                                                                                                   00C4F300 173C9400 000010
000025       002A
  000029   T-R FRLY   R  400000000043  400000000034  C4  00           N   R      TEST            40172858 0026DF2C 0017285A 70001006
                                                                                                   00404000 00000043 40000000 0034C401
                                                                                                   F300173D 48000000 10000000 00000000
                                                                                                   C401F300 173D4800 000010
  000031   T-R FRLY   T  400000000034  400000000043  C4  00           N   R      TEST            40268004 00044000 0017295A 78001004
                                                                                                   00404000 00000034 40000000 0043C401
                                                                                                   F300173C 94000000 10
  000033   T-R FRLY   T  400000000034  400000000043  C4  C4           N                          40294004 00044000 0017297E 78001004
                                                                                                   00404000 00000034 40000000 0043C4C4
                                                                                                   03000001 03080075 95010100 03020100
```

Figure 18. Frame-relay over token-ring data, LAN line trace sample report

NTRI logical data, LAN line trace sample report

```
                                                                  1
|           VTAM                                   ADVANCED COMMUNICATIONS FUNCTION
                                                        TRACE ANALYSIS PROGRAM
             DATE: mm:dd:yyyy                         LAN LINE TRACE REPORT (NTPRT)                        PAGE: 00001
       RECORD DATE: 01.26.1998    TIMESTAMP: 16.48.23.020946
  2          3       4   5            6           6    8    9   10    11  12  13  14     15
RECORD/    LINE ADDR/
  ELEMENT    TYPE    R/T DA            SA          DSAP SSAP NS  NR   RI C/R P/F  CMD   TIME          HEX  16

001752       02BB
  000636   NTRI LOG   T  400000003492  400000003390  04  04  104 030  N   C       INFO  070:59.7 00404000 00003492 40000000 33900404
                                                                                                   D03C4000 00002F8E 0CB20000 00200000
                                                                                                   00321C00 02770457 05AB0003 838000
  000637   NTRI LOG   T  400000003492  400000003390  04  04  105 030  N   C       INFO  070:59.7 00404000 00003492 40000000 33900404
                                                                                                   D23C4000 00002F93 0CB60000 00200000
                                                                                                   00321C00 02770457 05AC000D 0380C015
                                                                                                   00000000 000000C5 C3
  000638   NTRI LOG   R  400000003390  400000003492  04  04      104  N   R       RR    070:59.7 18404000 00003390 40000000 34920405
                                                                                                   01D0
  000639   NTRI LOG   R  400000003390  400000003492  04  04      105  N   R       RR    070:59.7 18404000 00003390 40000000 34920405
                                                                                                   01D2
  000640   NTRI LOG   R  400000003390  400000003492  04  04      106  N   R       RR    070:59.7 18404000 00003390 40000000 34920405
                                                                                                   01D4
001754       02BB
  000641   NTRI LOG   R  400000003390  400000003492  04  04  030 106  N   C       INFO  080:00.1 18404000 00003390 40000000 34920404
                                                                                                   3CD44040 1110AEF9 00FB0000 00320000
                                                                                                   00201C00 045B02C1 04D20C3F 00000000
                                                                                                   00000000 00000000 00000000 00000000
                                                                                                   00000000 00000000 00000000 00000000
                                                                                                   00000000 00000000 00000000 00000000
                                                                                                   00000000 00000000 00000000 00000000
                                                                                                   00000000 00000000 00000000 00000000
                                                                                                   00000000 00000000 00000000 00000000
                                                                                                   00000000 00000000 00000000 00000000
                                                                                                   00000000 00000000 00000000 00000000
                                                                                                   00000000 00000000 00000000 00000000
                                                                                                   00000000 00000000 00000000 00000000
                                                                                                   00000000 00000000 00000000 00000000
                                                                                                   00000000 00000000 00000000 00000000
                                                                                                   00000000 00000000 00000000 0000
                                                                                                   TRUNCATED DATA,
                                                                                                   SEE SYSPRINT FOR ENTIRE DATA
001768       02BB
  000642   NTRI LOG   T  400000003492  400000003390  04  04      031  N   R       RR    080:00.1 00404000 00003492 40000000 33900405
                                                                                                   013E
```

Figure 19. NTRI logical data, LAN line trace sample report

NTRI physical and IP data, LAN line trace sample report

```
                                                         1
        VTAM                                ADVANCED COMMUNICATIONS FUNCTION
                                                  TRACE ANALYSIS PROGRAM
         DATE: mm:dd:yyyy                       LAN LINE TRACE REPORT (NTPRT)                       PAGE: 00001
  2          3       4   5             6           6    8   9   10    11  12  13   14    15
RECORD/    LINE ADDR/
  ELEMENT    TYPE    R/T DA            SA          DSAP SSAP NS  NR   RI C/R P/F  CMD   TIME              HEX  16

000021       004C
  000002   T-R IP     T  300001999999  400000000027  AA  AA          N                          4015C80C 00044000 0014A36A 78001004
                                                                                                00403000 01999999 40000000 0027AAAA
                                                                                                03000000 08004500 001E0001 0000FE06
                                                                                                4BC80808 05026406 0001F1F2 F3F4F5F6
                                                                                                F7F8F9F0
  000004   T-R IP     T  300001999999  400000000027  AA  AA          N                          4015C88C 00044000 0014A38E 78001004
                                                                                                00403000 01999999 40000000 0027AAAA
                                                                                                03000000 08004500 001E0001 0000FE06
                                                                                                4BC80808 05026406 0001F1F2 F3F4F5F6
                                                                                                F7F8F9F0
  000006   T-R IP     T  300001999999  400000000027  AA  AA          N                          4015C90C 00044000 0014A3B2 78001004
                                                                                                00403000 01999999 40000000 0027AAAA
                                                                                                03000000 08004500 001E0001 0000FE06
                                                                                                4BC80808 05026406 0001F1F2 F3F4F5F6
                                                                                                F7F8F9F0
000022       004C
  000008   T-R IP     R  400000000027  300001999999  AA  AA          Y                          4814A148 00156C8C 0014A14A 70001006
                                                                                                10404000 00000027 B0000199 99998270
                                                                                                AAAA0300 00000800 4500001E 00010000
                                                                                                AAAA0300 00000800 4500001E 00010000
                                                                                                FF064AC8 64060001 08080502 F1F2F3F4
                                                                                                F5F6F7F8 F9F0
  000010   T-R IP     T  300001999999  400000000027  AA  AA          N                          4015C98C 00044000 0014A3D6 78001004
                                                                                                00403000 01999999 40000000 0027AAAA
                                                                                                03000000 08004500 00380001 0000FE01
                                                                                                4BB30808 05026406 00010300 29280000
                                                                                                00004500 001E0001 0000FE06 4BC86406
                                                                                                00010808 0502F1F2 F3F4F5F6 F7F8
000034       004C
  000021   NTRI PHY   T  000000000000  400000000027  00  04          N   C   S  TEST            4016020C 00044000 C114A3FA 78001004
                                                                                                00400000 00000000 40000000 00270004
                                                                                                F3000000 00000000 00000000 00000000
                                                                                                00000000 00000000 00000000 00000000
                                                                                                00000000 00000000 00000000 00000000
                                                                                                00000000 00000000 00000000 00000000
                                                                                                000000C2 00000016 030C0000 00000000
                                                                                                00000000 00000000 00000000 00000000
                                                                                                00000000 00000000 00000000 00000000
                                                                                                00000000 00000000 00000000 00000000
                                                                                                00000000 00000000 00000000
000036       004C
  000037   T-R ARP    T  FFFFFFFFFFFF  400000000027  AA  AA          Y                          4016278C 00044000 C114A41E 78001004
                                                                                                0040FFFF FFFFFFFF C0000000 00278270
                                                                                                AAAA0300 00000806 00060800 06040001
                                                                                                40000000 00276405 04010000 00000000
                                                                                                64060001
```

Figure 20. NTRI physical and IP data, LAN line trace sample report

Token-ring with BNN HPR data, LAN line trace sample report

```
                                                         1
        VTAM                               ADVANCED COMMUNICATIONS FUNCTION
                                                  TRACE ANALYSIS PROGRAM
         DATE: mm:dd:yyyy                       LAN LINE TRACE REPORT (NTPRT)                       PAGE: 00001
     RECORD DATE: 01.26.1998    TIMESTAMP: 16.48.20.174416
  2          3       4   5             6           7    8   9   10    11  12  13   14    15
RECORD/    LINE ADDR/
  ELEMENT    TYPE    R/T DA            SA          DSAP SSAP NS  NR   RI C/R P/F  CMD   TIME              HEX  16

000006       0048
  000002   NTRI PHY   R  400000000036  400001999998  C8  04          N   C      UI NLP          40168B10 00175F88 00168B12 70001006
                                                                                                10404000 00000036 40000199 9998C804
                                                                                                03C201C0 002702FF 00010203 04050607
                                                                                                C80403C2 01C00027 02FF0001 02030405
                                                                                                06070809 101112C2 D5D5
  000004   NTRI PHY   R  400000000036  400001999998  04  04  000 000  N   C      I NLP           40168B34 00176030 00168B36 70001006
                                                                                                10404000 00000036 40000199 99980404
                                                                                                0000C201 C0002702 FF000102 03040506
                                                                                                04040000 C201C000 2702FF00 01020304
                                                                                                05060708 09101112 C2D5D5
  000006   NTRI PHY   T  400001999998  400000000036  04  04      001  N   R      RR              40175A9C 00044000 00168D7A 78001004
                                                                                                00404000 01999998 40000000 00360405
                                                                                                0102
000007       0048
  000008   NTRI PHY   T  400001999998  400000000036  C8  C8          N   C      UI NLP          40175AF0 00044000 00168D9E 78001004
                                                                                                00404000 01999998 40000000 0036C8C8
                                                                                                03C20102 FF000102 03040506 07080910
                                                                                                1112C2D5 D5
  000010   NTRI PHY   T  400001999998  400000000036  C8  C8          N   C      UI NLP          40175B44 00044000 00168DC2 78001004
                                                                                                00404000 01999998 40000000 0036C8C8
                                                                                                03C20102 FF000102 03040506 07080910
                                                                                                1112C2D5 D5
  000012   NTRI PHY   R  400000000036  400001999998  C8  04          N   C      UI NLP          40168B58 0017612C 00168B5A 70001006
                                                                                                10404000 00000036 40000199 9998C804
                                                                                                03C201C0 002702FF 00010203 04050607
                                                                                                C80403C2 01C00027 02FF0001 02030405
                                                                                                06070809 101112C2 D5D5
```

Figure 21. Token-ring with BNN HPR data, LAN line trace sample report

Line trace detail reports

The selection parameter is LDPRT.

This topic contains line trace detail reports. See the following figures:

- Figure 22 on page 196
- Figure 23 on page 197
- Figure 24 on page 198
- Figure 25 on page 198
- Figure 26 on page 199
- Figure 27 on page 200
- Figure 28 on page 200
- Figure 29 on page 201
- Figure 30 on page 202
- Figure 31 on page 203
- Figure 32 on page 203
- Figure 33 on page 204

Table 30 on page 192 describes the column headers and the trace data contained in this report type. To locate this information about the sample reports, reference the numbers (n) listed in this table to the corresponding numbers (n) shown in the sample reports.

Table 30. Line trace detail report

Reference number (n)	Report column headers and the trace data
1	The page heading contains the report name, report parameter, and the date the report was printed or displayed.
2	**RECORD NUMBER** The ACF/TAP-assigned sequence number of the physical line trace record that was being processed when this line was printed or displayed.
3	**TYPE** Specifies the following trace data types of the record: **CSP** NCP line trace data **ENET** ESS line trace data **ESIT** ESS SIT data **FRLY** Frame-relay line trace data **FSIT** Frame-relay SIT data **NTRI** Line trace data from NTRI **SIT** Scanner interface trace data **X.25** X.25 trace data

Table 30. Line trace detail report (continued)	
Reference number (n)	**Report column headers and the trace data**
4	**LINE ADDR** The element address of the line that was being traced.
5	**ELEMENT NUMBER** The sequence number of an NCP line trace element from the input trace file.

Table 30. Line trace detail report (continued)	
Reference number (n)	**Report column headers and the trace data**
6	**ID-COMMAND** The instruction (ID) or command that was being processed when the trace record was written. The COMMAND part of this field--only entered on STAT entries. The ID information includes the following: **CHKPT** Checkpoint entry. **IOH** Input/output halfword data (see Note). **PARM** The parameter part of the PSA with no command entry. **RDATA** Receive data. **STAT** The status part of the PSA with a command entry. **XDATA** Transmit data. **Note:** IOH consists of the tag address (TA) and the tag data (TD) fields of the IOH instruction sent to the scanner (for type of SIT). The information for both ID and command includes the following: **COUNT** Get counter entry from the ESS line trace data. **NTRI IOH** NTRI I/O halfword. **NTRI LINE** Receive or transmit data from NTRI. **RCV CTRLWORD** Receive control word from the SIT data. **RDATA FRSE** Receive data from frame-relay switching equipment. **RDATA FRTE** Receive data from frame-relay terminal equipment. **RDATA LMI** Receive data from local management interface connection. **T-R IP ARP** Receive or transmit an ARP frame over an NTRI connection. **T-R IP LINE** Receive or transmit IP data over an NTRI connection. **XDATA FRSE** Transmit data from frame-relay switching equipment. **XDATA FRTE** Transmit data from frame-relay terminal equipment. **XDATA LMI** Transmit data from local management interface connection.

Table 30. Line trace detail report (continued)	
Reference number (n)	**Report column headers and the trace data**
6 (Continued)	**XMIT CTRLWORD** Transmit control word from the SIT data. For a list of valid commands, see *NCP and EP Reference Summary and Data Areas*, LY43-0030.
7	**ENTRY TYPE/SCANNER STATE** • For STAT entries, this is the mode the scanner was in when the trace record data was recorded. • For NTRI line entries, this is the type of data.
8	**TIME** The relative elapsed time (in hexadecimal) between the entries to the nearest 100 milliseconds. The time is measured from trace activation to the level 2 interrupt that is represented by each entry. For SIT and NTRI, this field is blank.
9	**TCC** The transmission correlation counter used to correlate SIT and NCP line trace entries for the same event. For NTRI, this field is blank.
10	**HEX** The hexadecimal trace entry from the PSA control block.
11	**TRANSLATION** This is the EBCDIC equivalent of the hexadecimal trace data.

For more information about gathering data for these traces, see Chapter 2, “Gathering host-collected trace data,” on page 7.

ESS line trace, line trace detail sample report

```
          VTAM                                    ADVANCED COMMUNICATIONS FUNCTION
                                                      TRACE ANALYSIS PROGRAM
          DATE: mm:dd:yyyy                           LINE TRACE DETAIL (LDPRT)                        PAGE: 00001
     TIMESTAMP:  09.58.27
   2     3     4     5          6            7         8   9                       10                              11
RECORD        LINE ELEMNT                ENTRY TYPE/
NUMBER TYPE  ADDR NUMBER  ID - COMMAND SCANNER STATE  TIME TCC                     HEX                          TRANSLATION

000002 ENET  005D 000001 PARM                          82  00   00002200 16137090 00000000 00000000          * ................
                  000002 STAT RECEIVE  TIMEOUT                  00530080 00000000 00000000 00000000          * ................
000004 ENET  005D 000003 PARM                          75  01   01002200 16137090 00000000 00000000          * ................
                  000004 STAT RECEIVE  EOF DAT STORD            4C530000 A413718C 00000000 00000003          * <...u...........
                  000005 RDATA                                  0200482C 6A8E1000 5A824974 0024AAAA 03000000 * ........!b.........
                                                                08060006 08000604 00021000 5A824974 AB010102 * .............!b......
                                                                40007CE3 C4                                  *  .@TD
                  000006 PARM                          75  02   02002200 16137288 00000000 00000000          * .......h........
                  000007 STAT RECEIVE  EOF DAT STORD            4C530000 98137384 00000000 00000005          * <...q..d........
                  000008 RDATA                                  0200482C 6A8E1000 5A824974 003AAAAA 03000000 * ........!b.........
                                                                08004500 003257B5 0000FF01 AD10AB01 01020A01 * ....................
                                                                01017CE3 C4                                  * ..@TD
000005 ENET  005D 000009 PARM                          75  00   00002200 0E13B770 3178317C 00000000          * ...........@....
                  000010 STAT XMT DATA XMIT STARTED             46510000 00000000 800FD700 00000001          * ..........P.....
                  000011 XDATA                                  FFFFFFFF FFFF0200 482C6A8E 08060001 08000604 * ....................
                                                                00010200 482C6A8E AB010101 00000000 0000AB01 * ....................
                                                                01027CE3 C4                                  * ..@TD
                  000012 PARM                          75  01   01002200 1613B86C 3178317C 00000000          * .......%...@....
                  000013 STAT XMT DATA XMIT STARTED             46510000 00000000 800FD700 00000002          * ..........P.....
                  000014 XDATA                                  FFFFFFFF FFFF0200 482C6A8E 0024AAAA 03000000 * ....................
                                                                08060006 08000604 00010200 482C6A8E AB010101 * ....................
                                                                00007CE3 C4                                  * ..@TD
                  000015 PARM                          75  02   02002200 16135CE0 3178317C 00000000          * ......*....@....
000006 ESIT  004B 000016 CHKPT                                  A5C10FC0                                     * VA..
                  000017 CHKPT                                  A5E22FC0                                     * vS..
                  000018 CHKPT                                  B1CC0FC0                                     * ....
                  000019 STAT RECEIVE  TIMEOUT                  00530080 00000000                            * ........
                  000020 IOH  RECEIVE                           21005301                                     * ....
                  000021 CHKPT                                  A4000F80                                     * u...
                  000022 CHKPT                                  A4310FC0                                     * u...
                  000023 PARM                             00    00002200 16108374                            * ......c.
                  000024 RECV CTRLWORD                          00108374 00002216 16108374                   * ..c.......c.
                  000025 IOH  XMT DATA                          21005100                                     * ....
                  000026 CHKPT                                  B5000E80                                     * ....
                  000027 PARM                             00    00002200 0E10D81C                            * ......Q.
                  000028 XMIT CTRLWORD                          0010D81C 0000220E                            * ..Q.....
                  000029 CHKPT                                  B56F0ED0                                     * .?..
                  000030 XDATA                                  02608C40 3EB10200 482C6A46 08004500 001C04D2 * .-. ...............K
                                                                00003B01 CD0A0A01 0101A201 01020800 2FA50662 * ..........s......v..
                                                                C1F82A00                                     * A8..
                  000031 STAT XMT DATA XMIT STARTED             46510000 0000                                * ......
                  000032 CHKPT                                  A47F1FD0                                     * u"..
```

Figure 22. ESS line trace, line trace detail sample report

Frame-relay logical data, line trace detail sample report

```
                                                                  1
          VTAM                                  ADVANCED COMMUNICATIONS FUNCTION
                                                       TRACE ANALYSIS PROGRAM
          DATE: mm:dd:yyyy                            LINE TRACE DETAIL (LDPRT)                              PAGE: 00001
      TIMESTAMP:  15.33.36
   2     3     4     5          6            7         8   9                      10                                11
RECORD        LINE ELEMNT                 ENTRY TYPE/
NUMBER TYPE   ADDR NUMBER  ID - COMMAND SCANNER STATE  TIME TCC                     HEX                           TRANSLATION

000002 FRLY  0028 000001 RDATA FRTE                    C694     04010308 4C807081 040401C5                   * ....<..a...E
                 000002 XDATA FRTE                     C694     06010308 4C807081 040501C3                   * ....<..a...C
                 000003 XDATA FRTE                     C92B     06010308 4C807081 0404C4C2 48000000 00620000 * ....<..a..DB........
                                                                00000047 0000000C 1D000000 00000000 00282B00 * ....................
                                                                000B0000 010001FF 00000001 40000000 000BFF00 * ....................
                                                                082A0000 00000000 0000B08D F9AF6B1E 4201     * ............9.,...
                 000004 RDATA FRTE                     C92B     04010308 4C807081 0404C2C6 48000000 00610000 * ....<..a..BF...../..
                                                                0000000C 00000047 1D000000 00000000 00342B00 * ....................
                                                                000C0000 010003FF 00000001 00000000 000BD000 * ....................
                                                                082A082A 00000000 0000B08D F9AF6B1E 42010000 * ............9.,.....
                                                                00000001 00000000 0100                       * ..........
000003 FRLY  0028 000005 XDATA FRTE                    C92E     06010308 4C807081 0404C6C4 48000000 00630000 * ....<..a..FD........
                                                                00000001 0000000B 1D000000 00000000 00162B80 * ....................
                                                                000D0000 0100D000 80000000 002D000F 00000000 * ....................
                 000006 RDATA FRTE                     C92E     04010308 4C807081 0404C4C8 48000000 00624000 * ....<..a..DH...... .
                                                                0000000B 00000001 1D000000 00000000 0004AB80 * ....................
                                                                000D                                         * ..
                 000007 XDATA FRTE                     C930     06010308 4C807081 0404C8C6 41000000 10644000 * ....<..a..HF...... .
                                                                00000001 0000000B 1D000000 00000000 0000     * ..................
000004 FRLY  0028 000008 XDATA FRTE                    C933     06010308 4C807081 0404CAC6 40000000 20658000 * ....<..a...F .......
                                                                00000001 0000000B 1D000033 004004BF 006A6B80 * ............. ....,.
                                                                00310103 03B1A030 42008700 00870000 00000000 * ..........g..g......
                                                                00000000 00000000 07C5C3C8 D6C1F1F1 000007C5 * .........ECHOA11...E
                                                                C3C8D6C1 F0F16012 D9B38956 242B85CD 09D5C5E3 * CHOA01-.R.i...e..NET
                                                                C14BC1F1 F1D50E0D F3D5C5E3 C14BC5C3 C8D6C1F1 * A.A11N..3NETA.ECHOA1
                                                                F12C0A01 08404040 40404040 402D0908 C9D5E3C5 * 1....        ...INTE
                                                                D9C1C3E3                                     * RACT
                 000009 RDATA FRTE                     C933     04010308 4C807081 0404C6CC 41000000 10634000 * ....<..a..F....... .
                                                                0000000B 00000001 1D000000 00000000 0000     * ..................
000005 FRLY  0028 000010 RDATA FRTE                    C934     04010308 4C807081 0404C8CC 40000000 20648000 * ....<..a..H. .......
                                                                0000000B 00000001 1D000040 003304BF 0036EB80 * ........... ........
                                                                00310100 00000000 02008000 00800000 00000000 * ....................
                                                                00000000 00000000 00000000 6012D9B3 8956242B * ............-.R.i...
                                                                85CD09D5 C5E3C14B C1F1F1D5                   * e..NETA.A11N
                 000011 XDATA FRTE                     C935     06010308 4C807081 0404CCCA 41000000 10664000 * ....<..a......... .
                                                                00000001 0000000B 1D000000 00000000 0000     * ..................
                 000012 RDATA FRTE                     C937     04010308 4C807081 0404CACE 40000002 00650000 * ....<..a.... .......
                                                                0000000C 00000047 1D000000 00000000 002A2B00 * ....................
                                                                00090000 010001FF 0000000B 00000000 0001FF00 * ....................
                                                                082A0000 00000001 00010003 8DE1BE00 800000C4 * ..................D
                 000013 XDATA FRTE                     C937     06010308 4C807081 0404CECC 48000001 00670000 * ....<..a...........
                                                                00000001 0000000B 1D000000 00000000 00162B80 * ....................
                                                                000D0000 0100D000 80000000 002D000F 00000000 * ....................
000006 FRLY  0028 000014 XDATA FRTE                    C937     06010308 4C807081 0404D0CC 40000000 20680001 * ....<..a.... .......
                                                                00000001 0000000B 1D000033 004004C0 00046B80 * ............. ....,.
                                                                00A0                                         * ..
                 000015 RDATA FRTE                     C938     04010308 4C807081 0404CCD2 48000001 00664000 * ....<..a...K...... .
                                                                0000000B 00000001 1D000000 00000000 0004AB80 * ....................
                                                                000D                                         * ..
                 000016 RDATA FRTE                     C938     04010308 4C807081 0404CED2 40000000 20670001 * ....<..a...K .......
                                                                0000000B 00000001 1D000040 003304C0 0004EB80 * ........... ........
                                                                00A0                                         * ..
```

Figure 23. Frame-relay logical data, line trace detail sample report

Frame-relay physical data, line trace detail sample report

```
                                                                 1
          VTAM                                  ADVANCED COMMUNICATIONS FUNCTION
                                                       TRACE ANALYSIS PROGRAM
          DATE: mm:dd:yyyy                            LINE TRACE DETAIL (LDPRT)                        PAGE: 00001
      TIMESTAMP:  14.58.04
   2     3     4     5          6             7         8   9                        10                               11
RECORD       LINE ELEMNT                ENTRY TYPE/
NUMBER TYPE  ADDR NUMBER  ID - COMMAND SCANNER STATE  TIME TCC                      HEX                          TRANSLATION

000008 FRLY  0001 000047 PARM                          40  00   00080000 10173170 50205024 000501AC          * ........&.&.....
                  000048 STAT XMIT DAT CMND COMPLETE            46110000 0000D4C4 00000000 00000007          * ......MD........
                  000049 XDATA LMI                              00010308 007D5101 0153021A 1A                * .....'.......
                  000050 PARM                          5D  01   01080000 101253C8 50205024 000501AC          * .......H&.&.....
                  000051 STAT XMIT DAT CMND COMPLETE            46110000 0000D4C4 00000000 0000000A          * ......MD........
                  000052 XDATA LMI                              00010308 00755101 01530221 19                * .............
                  000053 PARM                          62  02   02080000 1012587C 50205024 000501AC          * .......@&.&.....
                  000054 STAT XMIT DAT CMND COMPLETE            46110000 0000D4C4 00000000 0000000D          * ......MD........
                  000055 XDATA FRTE                             0A510308 4C807081 04050115                   * ....<..a....
                  000056 PARM                          62  03   03080000 10125928 50205024 000501AC          * ........&.&.....
                  000057 STAT XMIT DAT CMND COMPLETE            46110000 0000D4C4 00000000 00000010          * ......MD........
000009 FRLY  0001 000058 XDATA FRTE                             0A510308 4C807081 04050118                   * ....<..a....
                  000059 PARM                          64  04   04080000 101259D4 50205024 000501AC          * .......M&.&.....
                  000060 STAT XMIT DAT CMND COMPLETE            46110000 0000D4C4 00000000 00000011          * ......MD........
                  000061 XDATA FRTE                             06810308 4C807081 04040107                   * .a..<..a....
                  000062 PARM                          65  05   05080000 10125A80 50205024 000501AC          * ......!.&.&.....
                  000063 STAT XMIT DAT CMND COMPLETE            46110000 0000D4C4 00000000 00000012          * ......MD........
                  000064 XDATA FRTE                             06610308 4C807081 04040107                   * ./..<..a....
                  000065 XDATA FRTE                             06410308 4C807081 04040107                   * ....<..a....
                  000066 PARM                          65  06   06080000 10125BD8 50205024 000501AC          * ......$Q&.&.....
                  000067 STAT XMIT DAT CMND COMPLETE            46110000 0000D4C4 00000000 00000015          * ......MD........
                  000068 XDATA FRTE                             06210308 4C807081 04040109                   * ....<..a....
                  000070 STAT XMIT DAT CMND COMPLETE            46110000 0000D4C4 00000000 00000018          * ......MD........
                  000071 XDATA FRTE                             06810308 4C807081 04040607 40C00000 20490004 * .a..<..a.... .......
                                                                0000000E 00000052 1C000274 00350001 00A00000 * ....................
                                                                00000000 00000000 00000000 00000000 00007CE3 * ..................@T
                                                                C4                                           * D
                  000072 PARM                          65  08   08080000 10125D30 50205024 000501AC          * ......).&.&.....
                  000073 STAT XMIT DAT CMND COMPLETE            46110000 0000D4C4 00000000 0000001A          * ......MD........
                  000074 XDATA FRTE                             06610308 4C807081 04040607 40C00000 20480004 * ./..<..a.... .......
                                                                0000000E 00000052 1C000274 00350001 00A00000 * ....................
                                                                00000000 00000000 00000000 00000000 00007CE3 * ..................@T
                                                                C4                                           * D
000012 FRLY  0001 000075 XDATA FRTE                             06410308 4C807081 04040607 40C00000 20470004 * ....<..a.... .......
                                                                0000000E 00000052 1C000274 00350001 00A00000 * ....................
                                                                00000000 00000000 00000000 00000000 00007CE3 * ..................@T
                                                                C4                                           * D
                  000076 PARM                          65  09   09080000 10125E88 50205024 000501AC          * ......;h&.&.....
                  000077 STAT XMIT DAT CMND COMPLETE            46110000 0000D4C4 00000000 0000001C          * ......MD........
                  000078 XDATA FRTE                             06210308 4C807081 04040609 40C00000 20460004 * ....<..a.... .......
                                                                0000000E 00000052 1C000274 00350001 00A00000 * ....................
                                                                00000000 00000000 00000000 00000000 00007CE3 * ..................@T
                                                                C4                                           * D
```

Figure 24. Frame-relay physical data, line trace detail sample report

Frame-relay physical with BNN data, line trace detail sample report

```
                                                                 1
          VTAM                                  ADVANCED COMMUNICATIONS FUNCTION
                                                       TRACE ANALYSIS PROGRAM
          DATE: mm:dd:yyyy                            LINE TRACE DETAIL (LDPRT)                        PAGE: 00001
      TIMESTAMP:  14.58.04
   2     3     4     5          6             7         8   9                        10                               11
RECORD       LINE ELEMNT                ENTRY TYPE/
NUMBER TYPE  ADDR NUMBER  ID - COMMAND SCANNER STATE  TIME TCC                      HEX                          TRANSLATION

000005 FRLY  0001 000001 PARM                          39  FD   FD0C0000 00476524 00000000 00000000          * ................
                  000002 STAT RECEIVE  END OF FRAME             4C130000 0048A21C 00000000 0000C3DF          * <.....s.......C.
                  000003 RDATA FRTE                             08010300 800080C2 00074000 00000000 40000000 * .......B.. ..... ...
                                                                0000FFFF 04042AB8 2C002201 013C0300 00C440C1 * .................D A
                                                                C2C3C4C5 C6C7C8C9 D1D2D3D4 D5D6D7D8 D9E27CE3 * BCDEFGHIJKLMNOPQRS@T
                                                                C4                                           * D
                  000004 PARM                          39  FE   FE0C0000 004542D0 00000000 00000000          * ................
                  000005 STAT RECEIVE  END OF FRAME             4C130000 004542D0 00000000 0000C3E1          * <.............C.
                  000006 RDATA FRTE                             08010308 4C807082 044001BA                   * ....<..b. ..
                  000007 PARM                          39  FF   FF0C0000 0049CD5C 00000000 00000000          * .......*........
                  000008 STAT RECEIVE  END OF FRAME             4C130000 0049CD5C 00000000 0000C3E2          * <......*......CS
                  000009 RDATA                                  DATA LNGTH = 0 - POSSIBLE LOST DATA
000006 FRLY  0001 000010 PARM                          39  00   000C0000 00475C48 00000000 00000000          * ......*.........
                  000011 STAT RECEIVE  END OF FRAME             4C130000 0045B6F8 00000000 0000C3E3          * <......8......CT
                  000012 XDATA FRTE                             08010300 800080C2 00074000 00000000 40000000 * .......B.. ..... ...
                                                                0000FFFF 04042CBC C1D7D3F8 F440F0F3 F1F640C1 * ........APL84 0316 A
                                                                C2C3C4C5 7CE3C4                              * BCDE@TD
000007 FRLY  0001 000013 PARM                          39  01   010C0000 00467DD0 00000000 00000000          * ......'.........
                  000014 STAT RECEIVE  END OF FRAME             4C130000 00467DD0 00000000 0000C3E4          * <.....'.......CU
                  000015 RDATA FRTE                             08010308 4C807082 040501BE                   * ....<..b....
                  000016 PARM                          39  02   020C0000 004774E4 00000000 00000000          * .......U........
                  000017 STAT RECEIVE  END OF FRAME             4C130000 004774E4 00000000 0000C3E5          * <......U......CV
                  000018 RDATA FRTE                             08010308 4C807082 040501C0                   * ....<..b....
```

Figure 25. Frame-relay physical with BNN data, line trace detail sample report

Frame-relay physical with BNN HPR data, line trace detail sample report

```
                                                        1
          VTAM                                ADVANCED COMMUNICATIONS FUNCTION
                                                    TRACE ANALYSIS PROGRAM
          DATE: mm:dd:yyyy                        LINE TRACE DETAIL (LDPRT)                        PAGE: 00001
      TIMESTAMP:  14.58.04
   2     3     4     5          6            7         8   9                      10                              11
RECORD       LINE ELEMNT                ENTRY TYPE/
NUMBER TYPE  ADDR NUMBER  ID - COMMAND SCANNER STATE  TIME TCC                     HEX                          TRANSLATION

                  003748 CHKPT                                  A8000780                                     * y...
                  003749 CHKPT                                  A84107C0                                     * y...
                  003750 PARM                              D7   D70C0000 0021AA94 0000                       * P......m..
000315 FRLY  0013 003751 PARM                           D7  8C   8C080000 10703DBC 50205024 0005E33C          * ........&.&...T.
                  003752 STAT XMIT DAT CMND COMPLETE            46110000 0000C4C4 00000000 0000015A          * .......DD.......!
                  003753 XDATA LMI                              00010308 00759501 01010302 B9B1              * .......n.......
                  003754 PARM                             14  8D   8D080000 10701D70 50205024 0005E33C          * ........&.&...T.
                  003755 STAT XMIT DAT CMND COMPLETE            46110000 0000C4C4 00000000 00000161          * .......DD......./
                  003756 XDATA FRTE                             08010308 50817085 C400C202 6EF1FF00 80000002 * ....&a.eD.B.>1......
                  00000089 4C0C0037 00000000 00000000 17058000 * ...i<..............
                  0603D5C5 E3C10000 0600C1F4 F4D50000 03267CE3 * ..NETA....A44N....@T
                  C4                                            * D                    003757 PARM                      2D  8E
                  8E080000 10306C7C 50205024 0005E33C           * .......%@&.&...T.
                  003758 STAT XMIT DAT CMND COMPLETE            46110000 0000C4C4 00000000 00000165        * ......DD........
                  000316 FRLY  0013 003759 XDATA LMI            00010308 007D9501 01000302 B5B50703 02808207 * .....'n...........b.
                  03038082                                      * ...b                        003760 PARM
                  3C  8F   8F080000 10703DBC 50205024 0005E33C          * ........&.&...T.
                  003761 STAT XMIT DAT CMND COMPLETE            46110000 0000C4C4 00000000 00000167          * .......DD........
                  003762 XDATA LMI                              00010308 00759501 01010302 BAB2              * .......n.......
                  000317 FRLY  0013
                  003763 PARM                             38  D7   D70C0000 0021AA94 00000000 00000000          * P......m........

                  003764 STAT RECEIVE  TIMEOUT                  00130080 00000000 00000000 00000166          * ................

                  003765 PARM                             3C  D8   D80C0000 0021AA94 00000000 00000000          * Q......m........

                  003766 STAT RECEIVE  END OF FRAME             4C130000 0021AA94 00000000 00000168          * <......m........

                  003767 RDATA LMI                              00010308 007D9501 01010302 B3BA              * .....'n.......

                  003768 PARM                             47  D9   D90C0000 00277B8C 00000000 00000000          * R.....#.........

                  003769 STAT RECEIVE  TIMEOUT                  00130080 00000000 00000000 00000169          * ................

                  000318 FSIT  0013 003770 RCV CTRLWORD                          1E3C2800 0021AA94 8A21F0F8 * .......m..08

                  003771 IOH  XMIT DAT                          11001100                                     * ....

                  003772 CHKPT                                  B4004680                                     * ....

                  003773 PARM                                8E   8E080000 10306C7C 50205024 0005E33C          * .......%@&.&...T.

                  003774 XMIT CTRLWORD                          1E140210 00306C7C 00000000                   * .......%@....

                  003775 XDATA                                  18030001 0308007D 95010100 0302B5B5 07030280 * .......'n...........

                  82070303 80820002 1C00                       * b....b....
                  003776 CHKPT                                  B53246C0                                     * ....

                  003777 STAT XMIT DAT CMND COMPLETE            46110000 0000                                * ......

                  003778 CHKPT                                  A9EA87C0                                     * z.g.

                  003779 CHKPT                                  AABA27C0                                     * ....

                  003780 CHKPT                                  B1B507C0                                     * ....

                  003781 STAT RECEIVE  TIMEOUT                  00130080 00000000 00000000                   * ............

                  003782 IOH  RECEIVE                           11001301                                     * ....

                  003783 CHKPT                                  A8000780                                     * y...

                  003784 CHKPT                                  A84107C0                                     * y...

                  003785 PARM                                D8   D80C0000 0021AA94 0000                       * Q......m..
                  003786 RCV CTRLWORD                           1E3C2800 0021AA94 0021F0F8                   * .......m..08
                  000319 FSIT  0013 003787 IOH  XMIT DAT                          11001100                   * ...

                  003788 CHKPT                                  B4004680                                     * ....

                  003789 PARM                                8F   8F080000 10703DBC 50205024 0005E33C          * ........&.&...T.

                  003790 XMIT CTRLWORD                          1E140210 00703DBC 00000000                   * ............

                  003791 XDATA                                  0E030001 03080075 95010101 0302BAB2 00021200 * ........n...........

                  003792 CHKPT                                  B53246C0                                     * ....

                  003793 STAT XMIT DAT CMND COMPLETE            46110000 0000                                * ......

                  003794 CHKPT                                  A90607C0                                     * z...
```

Figure 26. Frame-relay physical with BNN HPR data, line trace detail sample report

Frame-relay over token-ring data, line trace detail sample report

```
                                                                    1
         VTAM                                     ADVANCED COMMUNICATIONS FUNCTION
                                                      TRACE ANALYSIS PROGRAM
         DATE: mm:dd:yyyy                            LINE TRACE DETAIL (LDPRT)                         PAGE: 00001
     TIMESTAMP:  15.58.07
   2     3     4     5          6              7          8   9                        10                               11

                  000027 T-R FRLY      RECEIVE                  40172834 00268004 C1172836 70001006 00404000 *  .......A........  .
                                                                00000043 40000000 003400C4 F300173C 94000000 * .... ......D3...m...
                                                                10000000 00000000 00C4F300 173C9400 000010   * .........D3...m....
                  000028 NTRI IOH                               48C08280 48C08180 48C0A400                   * ..b...a...u.
 000025 NTRI  002A 000029 T-R FRLY     RECEIVE                  40172858 0026DF2C 0017285A 70001006 00404000 *  ..........!.....  .
                                                                00000043 40000000 0034C401 F300173D 48000000 * .... .....D.3.......
                                                                10000000 00000000 C401F300 173D4800 000010   * ........D.3........
                  000030 NTRI IOH                               48C08280 48C08180 48C0A000                   * ..b...a.....
                  000031 T-R FRLY      TRANSMIT                 40268004 00044000 0017295A 78001004 00404000 *  ..... ....!.....  .
                                                                00000034 40000000 0043C401 F300173C 94000000 * .... .....D.3...m...
                                                                10                                           * .
                  000032 NTRI IOH                               48C0A000                                     * ....
                  000033 T-R FRLY      TRANSMIT                 40294004 00044000 0017297E 78001004 00404000 *  . ... ....=.....  .
                                                                00000034 40000000 0043C4C4 03000001 03080075 * .... .....DD........
                                                                95010100 03020100                            * n.......
                  000034 NTRI IOH                               48C0A400                                     * ..u.
                  000035 T-R FRLY      RECEIVE                  4017287C 00274004 0017287E 70001006 00404000 *  ..@.. ....=.....  .
                                                                00000043 40000000 0034C4C4 03000001 03080075 * .... .....DD........
                                                                95010100 03020100 C4C40300 00010308 00759501 * n.......DD........n.
                                                                01000302 0100                                * ......
                  000036 NTRI IOH                               48C08280 48C08180 48C0A400                   * ..b...a...u.
 000026 NTRI  002A 000037 T-R FRLY     RECEIVE                  401728A0 00279F2C 001728A2 70001006 00404000 *  ..........s.....  .
                                                                00000043 40000000 0034C4C4 03000001 0308007D * .... .....DD.......'
                                                                95010100 03020101 C4C40300 00010308 007D9501 * n.......DD.......'n.
                                                                01000302 01010703 01808807 03018888 07030190 * ..........h...hh....
                                                                88                                           * h
                  000038 NTRI IOH                               48C08280 48C0A000                            * ..b.....
                  000039 T-R FRLY      TRANSMIT                 40295F2C 00044000 001729A2 78001004 00404000 *  .¬... ....s.....  .
                                                                00000034 40000000 0043C4C4 03000001 0308007D * .... .....DD.......'
                                                                95010100 03020101 07030180 88070301 88880703 * n...........h...hh..
                                                                019088                                       * ..h
```

Figure 27. Frame-relay over token-ring data, line trace detail sample report

IP data, line trace detail sample report

Figure 28 on page 200 applies to NCP V7R1 or later and shows a sample of IP line trace obtained on an NTRI line.

```
                                                                    1
         VTAM                                  ADVANCED COMMUNICATIONS FUNCTION
                                                      TRACE ANALYSIS PROGRAM
         DATE: mm:dd:yyyy                            LINE TRACE DETAIL (LDPRT)                         PAGE: 00001
     TIMESTAMP:  11.03.08

   2     3     4     5          6              7          8   9                        10                               11
 RECORD      LINE ELEMNT                  ENTRY TYPE/
 NUMBER TYPE  ADDR NUMBER  ID - COMMAND SCANNER STATE  TIME TCC                     HEX                            TRANSLATION

 000021 NTRI  004C 000001 NTRI IOH                              48D0A000                                     * ....
                  000002 T-R IP LINE   TRANSMIT                 4015C80C 00044000 0014A36A 78001004 00403000 *  .H... ...t...... ..
                                                                01999999 40000000 0027AAAA 03000000 08004500 * .rrr ...............
                                                                001E0001 0000FE06 4BC80808 05026406 0001F1F2 * .........H........12
                                                                F3F4F5F6 F7F8F9F0                            * 34567890
                  000003 NTRI IOH                               48D0A000                                     * ....
                  000004 T-R IP LINE   TRANSMIT                 4015C88C 00044000 0014A38E 78001004 00403000 *  .H... ...t...... ..
                                                                01999999 40000000 0027AAAA 03000000 08004500 * .rrr ...............
                                                                001E0001 0000FE06 4BC80808 05026406 0001F1F2 * .........H........12
                                                                F3F4F5F6 F7F8F9F0                            * 34567890
                  000005 NTRI IOH                               48D08180 48D0A000                            * ..a.....
                  000006 T-R IP LINE   TRANSMIT                 4015C90C 00044000 0014A3B2 78001004 00403000 *  .I... ...t...... ..
                                                                01999999 40000000 0027AAAA 03000000 08004500 * .rrr ...............
                                                                001E0001 0000FE06 4BC80808 05026406 0001F1F2 * .........H........12
                                                                F3F4F5F6 F7F8F9F0                            * 34567890
                  000007 NTRI IOH                               48D0A400                                     * ..u.
 000022 NTRI  004C 000008 T-R IP LINE  RECEIVE                  4814A148 00156C8C 0014A14A 70001006 10404000 * ......%....¢.....  .
                                                                00000027 B0000199 99998270 AAAA0300 00000800 * .......rrrb.........
                                                                4500001E 00010000 AAAA0300 00000800 4500001E * ....................
                                                                00010000 FF064AC8 64060001 08080502 F1F2F3F4 * ......¢H........1234
                                                                F5F6F7F8 F9F0                                * 567890
                  000009 NTRI IOH                               48D08280 48D08180 48D0A000                   * ..b...a.....
                  000010 T-R IP LINE   TRANSMIT                 4015C98C 00044000 0014A3D6 78001004 00403000 *  .I... ...tO..... ..
                                                                01999999 40000000 0027AAAA 03000000 08004500 * .rrr ...............
                                                                00380001 0000FE01 4BB30808 05026406 00010300 * ....................
                                                                29280000 00004500 001E0001 0000FE06 4BC86406 * .................H..
                                                                00010808 0502F1F2 F3F4F5F6 F7F8              * ......12345678
 000033 NTRI  004C 000011 NTRI IOH                              48250688 48240888 48250888 48240088 48900000 * ...h...h...h...h....
                                                                48250088 48240888 48250888 48240088 48D10040 * ...h...h...h...h.J.
                                                                48900200 4850FF50 48500102 48500304 48502010 * .....&.&.&...&...&..
                                                                48500040 48500080 48500505 48500014 48509E3E * .&. .&...&...&...&..
                                                                48500014 48509E44 48D09080 48D10000 48900206 * .&...&.......J......
                                                                481102C2 489000AA 48D09880 48D0A000 48A52000 * ...B......q......v..
                                                                48D0A000                                     * ....
                  000012 T-R IP LINE   OPEN                     40000000 00038000 00000000 00000303          *  ..............
                  000013 T-R IP LINE   SCB CLEAR                40000000 00000000 00000000 000003CB          *  ..............
                  000014 NTRI IOH                               48D09880 48A52000 48D0A000                   * ..q..v......
                  000015 T-R IP LINE   OPEN                     40000000 00000000 00000000 00002343          *  ..............
                  000016 NTRI IOH                               48D09880 48A52000 48D0A000                   * ..q..v......
                  000017 T-R IP LINE   OPEN                     40000000 00000000 00000000 00001363          *  ..............
                  000018 NTRI IOH                               48D08680 48D08880 48A52000 48D0A000          * ..f...h..v......
```

Figure 28. IP data, line trace detail sample report

IP over frame-relay data, line trace detail sample report

The report shown in Figure 29 on page 201 applies to NCP V7R1 or later releases and shows a sample of IP line trace obtained on an NTRI line.

```
                                                                1
          VTAM                                   ADVANCED COMMUNICATIONS FUNCTION
                                                        TRACE ANALYSIS PROGRAM
          DATE: mm:dd:yyyy                             LINE TRACE DETAIL (LDPRT)                          PAGE: 00001
      TIMESTAMP:  11.03.08

   2     3     4     5          6            7         8   9                        10                                11
RECORD       LINE ELEMNT                ENTRY TYPE/
NUMBER TYPE  ADDR NUMBER  ID - COMMAND SCANNER STATE  TIME TCC                      HEX                            TRANSLATION
                  000068 STAT XMIT DAT CMND COMPLETE           46110000 0000C3C3 00000000 00000011          * ......CC........
                  000069 XDATA FRTE                            04610308 4C807083 04047F                     * ./..<..c.."
                  000070 PARM                           3D  09 09082A00 0A1B2F0C 046130CC 00000000          * ........./......
                  000071 STAT XMIT DAT CMND COMPLETE           46110000 0000C3C3 00000000 00000013          * ......CC........
                  000072 XDATA FRTE                            04610308 4C807083 04040101                   * ./..<..c....
                  000073 PARM                           44  0A 0A082400 021B410C 08A130CC 00000000          * ................
                  000074 STAT XMIT DAT CMND COMPLETE           46110000 0000C3C3 00000000 00000016          * ......CC........
                  000075 XDATA FRIP                            08A103CC 4500001E 00010000 FE0659DC 807F7E7D * ................."='
                                                               32003200 F1F2F3F4 F5F6F7F8 F9F0              * ....1234567890
000090 FRLY  001C 000076 PARM                           47  0D 0D0C1C00 581B4C0C 00000000 00000000          * ......<........
                  000077 STAT RECEIVE  END OF FRAME            4C130000 381B4C0C 08A10000 00000018          * <.....<........
                  000078 RDATA FRIP                            08A103CC 4500001E 00010000 FF0658DC 32003200 * ....................
                                                               807F7E7D F1F2F3F4 F5F6F7F8 F9F0              * ."='1234567890
000099 FRLY  0016 000079 PARM                           05  00 00080000 101AAD8C 5008500C 00037640          * ........&.&....
                  000080 STAT XMIT DAT CMND COMPLETE           46110000 00FFC3C3 00000000 00000002          * ......CC........
                  000081 XDATA FRARP                           08C10300 80000000 0806000F 08000204 00020000 * .A..................
                                                               807F7E01 08C1807F 7E7D                       * ."=..A."='
                  000082 PARM                           08  01 01080000 101AAF0C 5008500C 00037640          * ........&.&....
                  000083 STAT XMIT DAT CMND COMPLETE           46110000 00FFC3C3 00000000 00000005          * ......CC........
                  000084 XDATA FRARP                           08C10300 80000000 0806000F 08000204 00090000 * .A..................
                                                               807F7E01 08C1807F 7E7D                       * ."=..A."='
000100 FRLY  0016 000085 PARM                           02  00 000C0000 001AAD8C 00000000 00000000          * ................
                  000086 STAT RECEIVE  TIMEOUT                 00130080 181AAD0C 00000000 00000000          * ................
                  000087 PARM                           05  01 010C0000 001AAD8C 00000000 00000000          * ................
                  000088 STAT RECEIVE  END OF FRAME            4C130000 3A1AAE0C 00000000 00000001          * <...............
                  000089 RDATA FRARP                           08C10300 80000000 0806000F 08000204 000108C1 * .A................A
                                                               807F7E7D 0000807F 7E01                       * ."='..."=.
                  000090 PARM                           07  02 020C0000 001AAE8C 00000000 00000000          * ................
                  000091 STAT RECEIVE  END OF FRAME            4C130000 381AAE8C 00000000 00000003          * <...............
                  000092 RDATA FRARP                           08C10300 80000000 06090102                   * .A.........
                  000093 PARM                           08  03 030C0000 001AAF0C 00000000 00000000          * ................
                  000094 STAT RECEIVE  END OF FRAME            4C130000 3A1AAF8C 00000000 00000004          * <...............
```

Figure 29. IP over frame-relay data, line trace detail sample report

NCP line trace data, line trace detail sample report

```
                                                                  1
          VTAM                                   ADVANCED COMMUNICATIONS FUNCTION
                                                        TRACE ANALYSIS PROGRAM
          DATE: mm:dd:yyyy                             LINE TRACE DETAIL (LDPRT)                          PAGE: 00001
      TIMESTAMP:  16.41.14
   2     3     4     5          6             7         8   9                      10                              11
RECORD        LINE ELEMNT                ENTRY TYPE/
NUMBER TYPE   ADDR NUMBER  ID - COMMAND SCANNER STATE  TIME TCC                     HEX                          TRANSLATION

000002 CSP    0005 000001 PARM                          79  00   00000000 00000000 C1000000 00000000          * ........A.......
                   000002 STAT RECEIVE  END OF FRAME            44130000 00000000 C1730000 00000003          * ........A.......
                   000003 PARM                           7A  01   01000000 00000000 C1000000 00000000          * ........A.......
                   000004 STAT RECEIVE  END OF FRAME            44130000 00000000 C1110000 00000005          * ........A.......
                   000005 PARM                           7B  02   02000000 00000000 C1000000 00000000          * ........A.......
                   000006 STAT RECEIVE  END OF FRAME            44130000 00000000 C1110000 00000007          * ........A.......
                   000007 PARM                           85  03   03000000 00000000 C1000000 00000000          * ........A.......
                   000008 STAT RECEIVE  BUFFER REQ              40130000 00000000 C1300000 0000000A          *  .......A.......
                   000009 PARM                           85  04   04002600 2E120284 C1000000 00000000          * .......dA.......
                   000010 STAT RCV CONT END OF FRAME            4C140000 11120284 C1300000 0000000B          * <......dA.......
000003 CSP    0005 000011 RDATA                                   2D000000 0020EB80 00111140 40404040 40404000 * ...........        .
                                                                 00070100 00000000 00                         * .........
                   000012 PARM                           8F  05   05000000 00000000 C1000000 00000000          * ........A.......
                   000013 STAT RECEIVE  BUFFER REQ              40130000 00000000 C1720000 0000000F          *  .......A.......
                   000014 PARM                           8F  06   06002600 2E12C2E4 C1000000 00000000          * ......BUA.......
                   000015 STAT RCV CONT END OF FRAME            4C140000 2312C2E4 C1720000 00000010          * <.....BUA.......
                   000016 RDATA                                 2D000002 0021EB80 000D01                     * ...........
                   000017 PARM                           99  07   07000000 00000000 C1000000 00000000          * ........A.......
                   000018 STAT RECEIVE  BUFFER REQ              40130000 00000000 C1740000 00000012          *  .......A.......
                   000019 PARM                           99  08   08002600 2E132464 C1000000 00000000          * ........A.......
                   000020 STAT RCV CONT END OF FRAME            4C140000 23132464 C1740000 00000013          * <.......A.......
                   000021 RDATA                                 2D000003 0022EB80 000D01                     * ...........
000004 CSP    0005 000022 PARM                           A2  09   09000000 00000000 C1000000 00000000          * ........A.......
                   000023 STAT RECEIVE  END OF FRAME            44130000 00000000 C1710000 00000015          * ........A.......
                   000024 PARM                           AC  0A   0A000000 00000000 C1000000 00000000          * ........A.......
                   000025 STAT RECEIVE  END OF FRAME            44130000 00000000 C1710000 00000017          * ........A.......
                   000026 PARM                           B6  0B   0B000000 00000000 C1000000 00000000          * ........A.......
                   000027 STAT RECEIVE  END OF FRAME            44130000 00000000 C1710000 00000019          * ........A.......
                   000028 PARM                           C0  0C   0C000000 00000000 C1000000 00000000          * ........A.......
                   000029 STAT RECEIVE  END OF FRAME            44130000 00000000 C1710000 0000001B          * ........A.......
                   000030 PARM                           CA  0D   0D000000 00000000 C1000000 00000000          * ........A.......
                   000031 STAT RECEIVE  END OF FRAME            44130000 00000000 C1710000 0000001D          * ........A.......
000005 CSP    0005 000032 PARM                           D4  0E   0E000000 00000000 C1000000 00000000          * ........A.......
                   000033 STAT RECEIVE  END OF FRAME            44130000 00000000 C1710000 0000001F          * ........A.......
                   000034 PARM                           DF  0F   0F000000 00000000 C1000000 00000000          * ........A.......
                   000035 STAT RECEIVE  BUFFER REQ              40130000 00000000 C1960000 00000022          *  .......Ao......
                   000036 PARM                           DF  10   10002600 2E1447C4 C1000000 00000000          * .......DA.......
                   000037 STAT RCV CONT END OF FRAME            4C140000 241447C4 C1960000 00000023          * <......DAo......
                   000038 RDATA                                 2D000102 0023EB80 0031                       * ..........
                   000039 PARM                           E8  11   11000000 00000000 C1000000 00000000          * ........A.......
                   000040 STAT RECEIVE  END OF FRAME            44130000 00000000 C1910000 00000025          * ........Aj......
                   000041 PARM                           F2  12   12000000 00000000 C1000000 00000000          * ........A.......
                   000042 STAT RECEIVE  END OF FRAME            44130000 00000000 C1910000 00000027          * ........Aj......
000006 CSP    0005 000043 PARM                           FD  13   13000000 00000000 C1000000 00000000          * ........A.......
                   000044 STAT RECEIVE  BUFFER REQ              40130000 00000000 C1B80000 0000002A          *  .......A.......
                   000045 PARM                           FD  14   14002600 2E162A64 C1000000 00000000          * ........A.......
                   000046 STAT RCV CONT END OF FRAME            4C140000 24162A64 C1B80000 0000002B          * <.......A.......
                   000047 RDATA
```

Figure 30. NCP line trace data, line trace detail sample report

NTRI line trace data, line trace detail sample report

```
                                                        1
          VTAM                                ADVANCED COMMUNICATIONS FUNCTION
                                                 TRACE ANALYSIS PROGRAM
          DATE: mm:dd:yyyy                       LINE TRACE DETAIL (LDPRT)                        PAGE: 00001
      TIMESTAMP:  15.53.55

   2     3     4     5          6            7         8   9                       10                              11
RECORD       LINE ELEMNT                ENTRY TYPE/
NUMBER TYPE  ADDR NUMBER  ID - COMMAND SCANNER STATE  TIME TCC                     HEX                         TRANSLATION

000014 NTRI  0082 000001 NTRI LINE     RECEIVE             400CB4EC 000FC438 000CB4EE 70001006             *  .....D........
                  000002 NTRI IOH                          4AC08280 4AC08180 4AC0A000                    * &cent;.b.&cent;.a.&cent;...
                  000003 NTRI LINE     TRANSMIT            40109CD0 00044000 000CB5A6 78CC0404 00404000 *  ..... ....w.....  .
                                                           00000019 C0000000 00310280 0404DE56 24000201 * ....................
                                                           00248B00 0001020B 01100000 C3E7              * ............CX
                  000004 NTRI IOH                          4AC0A400                                      * &cent;.u.
                  000005 NTRI LINE     RECEIVE             400CB510 000FC520 000CB512 70000406           *  .....E........
                  000006 NTRI IOH                          4AC08280 4AC0A400                             * &cent;.b.&cent;.u.
                  000007 NTRI LINE     RECEIVE             400CB534 000FC608 000CB536 70001006 10404000 *  .....F..........  .
                                                           00000031 C0000000 00190200 01C60000 C3E7C408 * .............F..CXD.
                                                           F824D740 00C6C3E7 040501E0                   * 8.P .FCX....
                  000008 NTRI IOH                          4AC08280 4AC0A400                             * &cent;.b.&cent;.u.
                  000009 NTRI LINE     RECEIVE             400CB558 000FC6F0 000CB55A 70001006           *  .....F0...!....
000015 NTRI  0082 000010 NTRI IOH                          4AC08280 4AC0A400                             * &cent;.b.&cent;.u.
                  000011 NTRI LINE     RECEIVE             400CB57C 000FC84C 000CB57E 70001006 10404000 *  ..@..H&lt;...=.....  .
                                                           00000031 C0000000 00200200 01D00000 C3E7C408 * ................CXD.
                                                           F824D740 00C6C3E7 040456E0 2C000102 00248381 * 8.P .FCX..........ca
                                                           00                                           * .
                  000012 NTRI IOH                          4AC0A400 4AC08280                             * &cent;.u.&cent;.b.
                  000013 NTRI LINE     RECEIVE             400CB4EC 000FD1D0 000CB4EE 70001006           *  .....J........
                  000014 NTRI IOH                          4AC08280 4AC08180 4AC0A000                    * &cent;.b.&cent;.a.&cent;...
                  000015 NTRI LINE     TRANSMIT            40109CD0 00044000 000CB5CA 78CC0404 00404000 *  ..... ..........  .
                                                           00000020 C0000000 00310280 04050158          * ................
                  000016 NTRI IOH                          4AC0A400                                      * &cent;.u.
                  000017 NTRI LINE     RECEIVE             400CB510 000FD2B8 000CB512 70001006 10404000 *  .....K..........  .
                                                           00000031 C0000000 00190200 01F40000 C3E7C408 * .............4..CXD.
                                                           F824D740 00C6C3E7 040456E0 2C000102 00248381 * 8.P .FCX..........ca
                                                           00                                           * .
000016 NTRI  0082 000018 NTRI IOH                          4AC0A400 4AC08280                             * &cent;.u.&cent;.b.
                  000019 NTRI LINE     RECEIVE             400CB534 000FD32C 000CB536 70001006           *  .....L........
                  000020 NTRI IOH                          4AC08280 4AC08180 4AC0A400                    * &cent;.b.&cent;.a.&cent;.u.
                  000021 NTRI LINE     RECEIVE             400CB558 000FD488 000CB55A 70000406           *  .....Mh...!....
                  000022 NTRI IOH                          4AC0A000 4AC08280                             * &cent;...&cent;.b.
                  000023 NTRI LINE     TRANSMIT            40109CD0 00044000 000CB5EE 78CC0404 00404000 *  ..... ..........  .
                                                           00000019 C0000000 00310280 04050158          * ................
                  000024 NTRI IOH                          4AC08880 4A952000 4AC0A000                    * &cent;.h.&cent;n..&cent;...
                  000025 NTRI LINE     SCB CLEAR           400CB57C 000FBB9C 000CB57E 700010CB           *  ..@.......=....
                  000026 NTRI IOH                          4AC0A400                                      * &cent;.u.
                  000027 NTRI LINE     RECEIVE             400CB57C 000FD5E4 000CB57E 70001006           *  ..@..NU...=....
                  000028 NTRI IOH                          4AC08280 4AC08180 4AC0A000                    * &cent;.b.&cent;.a.¢...
```

Figure 31. NTRI line trace data, line trace detail sample report

Token-ring with BNN HPR data, line trace sample report

```
                                                        1
          VTAM                                ADVANCED COMMUNICATIONS FUNCTION
                                                 TRACE ANALYSIS PROGRAM
          DATE: mm:dd:yyyy                       LINE TRACE DETAIL (LDPRT)                        PAGE: 00001
      TIMESTAMP:  15.53.55

   2     3     4     5          6            7         8   9                       10                              11
RECORD       LINE ELEMNT                ENTRY TYPE/
NUMBER TYPE  ADDR NUMBER  ID - COMMAND SCANNER STATE  TIME TCC                     HEX                         TRANSLATION

000006 NTRI  0048 000001 NTRI IOH                          48C2A400                                      * .Bu.
                  000002 NTRI LINE     RECEIVE             40168B10 00175F88 00168B12 70001006 10404000 *  .....¬h.........  .
                                                           00000036 40000199 9998C804 03C201C0 002702FF * .... ..rrqH..B......
                                                           00010203 04050607 C80403C2 01C00027 02FF0001 * ........H..B........
                                                           02030405 06070809 101112C2 D5D5              * ...........BNN
                  000003 NTRI IOH                          48C28280 48C2A400                             * .Bb..Bu.
                  000004 NTRI LINE     RECEIVE             40168B34 00176030 00168B36 70001006 10404000 *  .....-..........  .
                                                           00000036 40000199 99980404 0000C201 C0002702 * .... ..rrq....B.....
                                                           FF000102 03040506 04040000 C201C000 2702FF00 * ............B.......
                                                           01020304 05060708 09101112 C2D5D5            * ............BNN
                  000005 NTRI IOH                          48C28280 48C28180 48C2A000                    * .Bb..Ba..B..
                  000006 NTRI LINE     TRANSMIT            40175A9C 00044000 00168D7A 78001004 00404000 *  .!... ....:.....  .
                                                           01999998 40000000 00360405 0102              * .rrq .........
                  000007 NTRI IOH                          48C28180 48C2A000                             * .Ba..B..
000007 NTRI  0048 000008 NTRI LINE     TRANSMIT            40175AF0 00044000 00168D9E 78001004 00404000 *  .!0.. ..........  .
                                                           01999998 40000000 0036C8C8 03C20102 FF000102 * .rrq .....HH.B......
                                                           03040506 07080910 1112C2D5 D5                * ..........BNN
                  000009 NTRI IOH                          48C28180 48C2A000                             * .Ba..B..
                  000010 NTRI LINE     TRANSMIT            40175B44 00044000 00168DC2 78001004 00404000 *  .$... ....B.....  .
                                                           01999998 40000000 0036C8C8 03C20102 FF000102 * .rrq .....HH.B......
                                                           03040506 07080910 1112C2D5 D5                * ..........BNN
                  000011 NTRI IOH                          48C2A400                                      * .Bu.
                  000012 NTRI LINE     RECEIVE             40168B58 0017612C 00168B5A 70001006 10404000 *  ...../....!.....  .
                                                           00000036 40000199 9998C804 03C201C0 002702FF * .... ..rrqH..B......
                                                           00010203 04050607 C80403C2 01C00027 02FF0001 * ........H..B........
                                                           02030405 06070809 101112C2 D5D5              * ...........BNN
                  000013 NTRI IOH                          48C28280 48C2A400                             * .Bb..Bu.
```

Figure 32. Token-ring with BNN HPR data, line trace sample report

X.25 data, line trace detail sample report

The sample report shown in Figure 33 on page 204 lists only errors and exceptions for X.25 line trace data. It is produced using the same input data as the line trace summary report. For more information, see “INPUT parameter” on page 41.

```
                                                                  1
          VTAM                                   ADVANCED COMMUNICATIONS FUNCTION
                                                        TRACE ANALYSIS PROGRAM
          DATE: mm:dd:yyyy                             LINE TRACE DETAIL (LDPRT)                          PAGE: 00001
     TIMESTAMP:  07.16.37

   2     3     4     5          6             7         8   9                        10                                11
RECORD       LINE ELEMNT                 ENTRY TYPE/
NUMBER TYPE  ADDR NUMBER  ID - COMMAND SCANNER STATE  TIME TCC                      HEX                            TRANSLATION

000008 X.25  0024 000001 PARM                          D8  00   00080000 060A77E8 00000000 00000000          * .......Y........
                  000002 STAT RECEIVE  END OF FRAME             44130000 060A77E8 011F0000 00000003          * .......Y........
                  000003 PARM                          D8  01   01080000 060A77E8 00000000 00000000          * .......Y........
                  000004 STAT RECEIVE  END OF FRAME             44130000 060A77E8 01730000 00000005          * .......Y........
000009 X.25  0024 000005 PARM                          4A  00   00800000 100A7918 08B808BC 00000000          * ................
                  000006 STAT SET MODE CMND COMPLETE            44010000 9000D703 00000000 00000000          * ......P.........
                  000007 PARM                          4B  01   01000000 100A7918 08B808BC 00000000          * ................
                  000008 STAT ENABLE   CMND COMPLETE            4402009E 9000D793 00000000 00000001          * ......Pl........
                  000009 PARM                          D7  02   02080000 100A7918 015308BC 00000000          * ................
                  000010 STAT XMIT CTL CMND COMPLETE            44100000 9000D793 00000000 00000002          * ......Pl........
                  000011 PARM                          D8  03   03080000 100A7918 013F08BC 00000000          * ................
                  000012 STAT XMIT CTL CMND COMPLETE            44100000 9000D793 00000000 00000004          * ......Pl........
                  000013 PARM                          D9  04   04082F00 050C9180 010008BC 00000000          * ......j.........
                  000014 STAT XMIT DAT CMND COMPLETE            46110000 9000D793 00000000 00000006          * ......Pl........
                  000015 XDATA                                  1000FB00 00                                  * .....
000010 X.25  0024 000016 PARM                          D9  02   02080000 060A77E8 00000000 00000000          * .......Y........
                  000017 STAT RECEIVE  END OF FRAME             44130000 060A77E8 01210000 00000007          * .......Y........
                  000018 PARM                          B4  03   03080000 060A77E8 00000000 00000000          * .......Y........
                  000019 STAT RECEIVE  END OF FRAME             44130000 060A77E8 032F0000 00000008          * .......Y........
                  000020 PARM                          B6  04   04080000 060A77E8 00000000 00000000          * .......Y........
                  000021 STAT RECEIVE  END OF FRAME             44130000 060A77E8 01210000 0000000B          * .......Y........
                  000022 PARM                          B6  05   05083000 060CA88C 00000000 00000000          * ......y.........
                  000023 STAT RECEIVE  END OF FRAME             4C130000 010CA88C 03200000 0000000C          * <.....y.........
                  000024 RDATA                                  1000FB07 33                                  * .....
                  000025 PARM                          B8  06   06083000 060CAA1C 00000000 00000000          * ................
                  000026 STAT RECEIVE  END OF FRAME             4C130000 010CAA1C 03220000 0000000E          * <...............
000011 X.25  0024 000027 RDATA
```

Figure 33. X.25 data, line trace detail sample report

Line trace summary reports

The selection parameter is LSPRT for NCP V4R3.1 and later.

Requirement: A system sort program is required to produce this report.

This topic includes line trace summary reports. See the following figures:

- Figure 34 on page 206
- Figure 35 on page 206
- Figure 36 on page 207
- Figure 38 on page 208

Table 31 on page 204 describes the column headers and the trace data contained in this report type. To locate this information about the sample reports, reference the numbers (n) listed in this table to the corresponding numbers (n) shown in the sample reports.

Table 31. Line trace summary report

Reference number (n)	Report column headers and the trace data
1	The page heading contains the report name, report parameter, and the date the report was printed or displayed.
2	**LINE** The element address of the line being traced.

Table 31. Line trace summary report (continued)	
Reference number (n)	**Report column headers and the trace data**
3	**CORR** The NCP-assigned correlator number that puts line trace events in chronological order. **Note:** When receive ready suppression (RRSUP=YES) or timeout suppression (TOSUP) is on, the correlator numbers of those Receive Ready/Receive-Not-Ready frames and timeout frames are not seen in the line trace summary report.
4	**RECORD ELEMENT** This is a cross-reference to record or message numbers in other ACF/TAP reports.
5	**ELEMENT NUMBER** The ACF/TAP-assigned sequence number of the last complete element shown on this line.
6	**Address and control information:** **ADDR** Address byte **CMND** Command **CNTL** Control bytes **IDENT** Element identifier **NR** Number received **NS** Number sent **PF** Poll/Final **TCC** Transmission correlation count **TIME** Timestamp **Note:** In some cases, the address information in this report does not agree with the address displayed on the line trace device or in the generation definition. The scanner might change the address because of the way it passes data to NCP. However, the scanner interface trace displays the correct address.
7	**HEX** The trace data for the line trace element, in hexadecimal.
8	**DATA TRANSLATION/EXCEPTION STATUS** This is the EBCDIC equivalent of the hexadecimal trace data.

For more information about gathering data for the CSP data trace, ESS line data trace, frame-relay physical data trace, frame-relay physical with BNN HPR data trace, and X.25 data trace, see Chapter 2, “Gathering host-collected trace data,” on page 7.

CSP data, line trace summary sample report

For the report shown in Figure 34 on page 206, the selection parameters are LSPRT=YES (Default), INPUT=LINE, or ALL. If correlated CSP data is not present, this report is blank.

```
                                                        1
          VTAM                                ADVANCED COMMUNICATIONS FUNCTION
                                                    TRACE ANALYSIS PROGRAM
          DATE: mm:dd:yyyy                        LINE TRACE SUMMARY (LSPRT)                        PAGE: 00001
        2
SDLC  LINE = 0005     PRIMARY    TRACE NUMBER 0000

   3         4      5      6                                                                7                        8
          MESSAGE ELEMNT                                                                                   DATA TRANSLATION/
  CORR    NUMBER  NUMBER  ADDR  CNTL  NR  NS  PF  CMND  TIME TCC IDENT                    HEX                EXCEPTION STATUS

00000002  000022  000052  C1    93            P   SNRM  79  02   PARMX   02040000 00000000 C1930894          *
                  000053                                         STATX   44100000 9000D3C3 00000000 00000002 *
00000003  000001  000001                                 79  00   PARMR   00000000 00000000 C1000000          *
                  000002  C1    73            P   NSA            STATR   44130000 00000000 C1730000 00000003 *
00000004  000023  000054    000004 RECEIVE-READY,   000000 RECEIVE-NOT-READY ELEMENTS SUPPRESSED
00000008  000025  000058  C1    00    00  00      INFO  83  05   PARMX   05002600 1211A104 C1000894          *
                  000059                                         STATX   46110000 9000D3C3 00000000 00000008 *
                  000060                                         DATAX   2D000000 00206B80 00110201 05000000 * ......,.........
                                                                         0025                                * ..
00000009  000026  000061    000001 RECEIVE-READY,   000000 RECEIVE-NOT-READY ELEMENTS SUPPRESSED
00000010  000004  000007                                 85  03   PARMR   03000000 00000000 C1000000          *
                  000008  C1    30    01  00  P   INFO           STATR   40130000 00000000 C1300000 0000000A *
00000011  000005  000009                                 85  04   PARMR   04002600 2E120284 C1000000          *
                  000010  C1    30    01  00  P   INFO           STATR   4C140000 11120284 C1300000 0000000B *
                  000011                                         DATAR   2D000000 0020EB80 00111140 40404040 * ...........
                                                                         40404000 00070100 00000000 00       *    ..........
00000012  000027  000063  C1    22    01  01      INFO  8C  07   PARMX   07002600 0C1202E4 C1220894          *
                  000064                                         STATX   46110000 9000D3C3 00000000 0000000C *
                  000065                                         DATAX   2D000200 00216B80 000D0201          * ......,.....
00000013  000028  000066  C1    24    01  02      INFO  8E  08   PARMX   08002600 0C1262E4 C1240894          *
                  000067                                         STATX   46110000 9000D3C3 00000000 0000000D *
                  000068                                         DATAX   2D000300 00226B80 000D0201          * ......,.....
```

Figure 34. CSP data, line trace summary sample report

ESS line data, line trace summary sample report

For the report shown in Figure 35 on page 206, the selection parameter is LSPRT=YES (default).

```
                                                        1
          VTAM                                ADVANCED COMMUNICATIONS FUNCTION
                                                    TRACE ANALYSIS PROGRAM
          DATE: mm:dd:yyyy                        LINE TRACE SUMMARY (LSPRT)                        PAGE: 00001
             2
   ETHERNET  LINE = 005D     PRIMARY    TRACE NUMBER 0000

   3         4      5      6                                                                7                        8
          RECORD  ELEMNT                                                                                   DATA TRANSLATION/
  CORR    NUMBER  NUMBER  ADDR  CNTL  NR  NS  PF  CMND  TIME TCC IDENT                    HEX                EXCEPTION STATUS

00000000  000003  000007                                 CB  00   PARMX   00002200 0E10ACCC 3178317C F0F0F0F0 *
                  000008                                         STATX   46510000 00000000 800FD700 00000000 * XMIT STARTED
                  000009                                         DATAX   FFFFFFFF FFFF0200 482C6A8E 08067CE3 * .............@T
                                                                         C4                                  * D
00000001  000003  000010                                 CB  01   PARMX   01002200 1610ADC8 3178317C F0F0F0F0 *
                  000011                                         STATX   46510000 00000000 800FD700 00000001 * XMIT STARTED
                  000012                                         DATAX   FFFFFFFF FFFF0200 482C6A8E 00247CE3 * .............@T
                                                                         C4                                  * D
00000002  000002  000001                                 CB  00   PARMR   00002200 1610EEC0 00000000 F0F0F0F0 *
                  000002                                         STATR   4C530000 A410EFBC 00000000 00000002 * EOF DAT STORD
                  000003                                         DATAR   0200482C 6A8E1000 5A824974 00247CE3 * ........!b....@T
                                                                         C4                                  * D
00000003  000003  000013                                 CB  02   PARMX   02002200 1610B1B8 3178317C F0F0F0F0 *
                  000014                                         STATX   46510000 00000000 800FD700 00000003 * XMIT STARTED
                  000015                                         DATAX   10005A82 49740200 482C6A8E 006C7CE3 * ..!b........%@T
                                                                         C4                                  * D
00000004  000002  000004                                 CB  01   PARMR   01002200 1610F0B8 00000000 F0F0F0F0 *
                  000005                                         STATR   4C530000 6610F1B4 00000000 00000004 * EOF DAT STORD
                  000006                                         DATAR   0200482C 6A8E1000 5A824974 006C7CE3 * ........!b...%@T
                                                                         C4                                  * D
00000005  000006  000016                                 AA  02   PARMR   02002200 1610F5A4 00000000 F0F0F0F0 *
                  000017                                         STATR   4C530000 9C10F6A0 00000000 00000005 * EOF DAT STORD
                  000018                                         DATAR   0200482C 6A8E1000 5A825AD7 08007CE3 * ........!b!P..@T
                                                                         C4                                  * D
00000006  000007  000022                                 AA  03   PARMX   03002200 0E10EEC0 3178317C F0F0F0F0 *
                  000023                                         STATX   46510000 00000000 800FD700 00000006 * XMIT STARTED
                  000024                                         DATAX   FFFFFFFF FFFF0200 482C6A8E 08067CE3 * .............@T
                                                                         C4                                  * D
00000007  000007  000025                                 AA  04   PARMX   04002200 1610EFBC 3178317C F0F0F0F0 *
                  000026                                         STATX   46510000 00000000 800FD700 00000007 * XMIT STARTED
                  000027                                         DATAX   FFFFFFFF FFFF0200 482C6A8E 00247CE3 * .............@T
                                                                         C4                                  * D
00000008  000006  000019                                 AA  03   PARMR   03002200 1610F79C 00000000 F0F0F0F0 *
                  000020                                         STATR   4C530000 9C10F898 00000000 00000008 * EOF DAT STORD
                  000021                                         DATAR   0200482C 6A8E1000 5A825AD7 08067CE3 * ........!b!P..@T
                                                                         C4                                  * D
00000009  000007  000028                                 AA  05   PARMX   05002200 0E113C84 3178317C F0F0F0F0 *
                  000029                                         STATX   46510000 00000000 800FD700 00000009 * XMIT STARTED
                  000030                                         DATAX   10005A82 5AD70200 482C6A8E 08007CE3 * ..!b!P........@T
                                                                         C4                                  * D
00000010  000008  000031                                 D2  04   PARMR   04002200 161120F4 00000000 F0F0F0F0 *
                  000032                                         STATR   4C530000 951121F0 00000000 0000000A * EOF DAT STORD
                  000033                                         DATAR   0200482C 6A8E1000 5A825AD7 08007CE3 * ........!b!P..@T
                                                                         C4                                  * D
```

Figure 35. ESS line data, line trace summary sample report

Frame-relay physical data, line trace summary sample report

For the report shown in Figure 36 on page 207, the selection parameter is LSPRT=YES (default).

```
                                                                  1
          VTAM                                   ADVANCED COMMUNICATIONS FUNCTION
                                                      TRACE ANALYSIS PROGRAM
          DATE: mm:dd:yyyy                           LINE TRACE SUMMARY (LSPRT)                          PAGE: 00001
                 2
FRAME RELAY  LINE = 0001     PRIMARY    TRACE NUMBER 0000

   3         4      5      6                                                                  7                        8
          MESSAGE ELEMNT                                                                                        DATA TRANSLATION/
  CORR    NUMBER  NUMBER  ADDR  CNTL  NR  NS  PF  CMND  TIME TCC IDENT                    HEX                    EXCEPTION STATUS

00000014  000008  000026                                62  0B   PARMR   0B0C0000 00174190 00000000          *
                  000027  0025                                   STATR   4C130000 00174BA4 00000000 0000000E *
                  000028        1404  02  0A      INFO           DATAR   08510308 4C807081 04041404 40C01110 * ....<..a.... ...
                                                                         2067000A 00000052 0000000E 1C000035 * ................
                                                                         02CF0001 00E40000 00000000 00000000 * .....U..........
                                                                         00000000 00000000 00007CE3 C4       * ..........@TD
00000015  000009  000029                                62  0C   PARMR   0C0C0000 00174E54 00000000          *
                  000030  0025                                   STATR   4C130000 00174FAC 00000000 0000000F *
                  000031        1604  02  0B      INFO           DATAR   08510308 4C807081 04041604 40C01110 * ....<..a.... ...
                                                                         2079000A 00000052 0000000E 1C000035 * ................
                                                                         02CF0001 00E40000 00000000 00000000 * .....U..........
                                                                         00000000 00000000 00007CE3 C4       * ..........@TD
00000017  000016  000059    000007 RECEIVE-READY,   000000 RECEIVE-NOT-READY ELEMENTS SUPPRESSED
00000026  000018  000072  0016                          65  08   PARMX   08080000 10125D30 50205024          *
                  000073                                         STATX   46110000 0000D4C4 00000000 0000001A *
                  000074        0607  03  03  P   INFO           DATAX   06610308 4C807081 04040607 40C00000 * ./..<..a.... ...
                                                                         20480004 0000000E 00000052 1C000274 * ................
                                                                         00350001 00A00000 00000000 00000000 * ................
                                                                         00000000 00000000 00007CE3 C4       * ..........@TD
                  000075        0607  03  03  P   INFO           DATAX   06410308 4C807081 04040607 40C00000 * ....<..a.... ...
                                                                         20470004 0000000E 00000052 1C000274 * ................
                                                                         00350001 00A00000 00000000 00000000 * ................
                                                                         00000000 00000000 00007CE3 C4       * ..........@TD
00000027  000020  000079    000013 RECEIVE-READY,   000000 RECEIVE-NOT-READY ELEMENTS SUPPRESSED
00000042  000034  000154  0028                          66  0E   PARMX   0E080000 10125678 50205024          *
                  000155                                         STATX   46110000 0000D4C4 00000000 0000002A *
                  000156        0607  03  03  P   INFO           DATAX   0A810308 4C807081 04040607 40C00000 * .a..<..a.... ...
```

Figure 36. Frame-relay physical data, line trace summary sample report

Frame-relay physical with BNN HPR data, line trace summary sample report

```
                                                        1
         SSP VxRx                                       ADVANCED COMMUNICATIONS FUNCTION
                                                          TRACE ANALYSIS PROGRAM
         DATE: mm:dd:yyyy                                LINE TRACE SUMMARY (LSPRT)                          PAGE: 00001
              2
FRAME RELAY  LINE = 0001     PRIMARY    TRACE NUMBER 0000

   3        4      5      6                                                      7                            8
         MESSAGE ELEMNT                                                                                DATA TRANSLATION/
  CORR   NUMBER  NUMBER  ADDR  CNTL  NR  NS  PF  CMND  TIME TCC IDENT                 HEX                  EXCEPTION STATUS

                 003369                                         STATX   46110000 0000C4C4 00000000 00000143 *
                 003370        BF            P   XID            DATAX   0C010308 4C807081 0404BF24 2CFFF000 * ....&lt;..a.....0.
                                                                        00000047 0800082A 01000000 040000C1 * ...............A
                                                                        F0F4C340 40404081 00013004 9E00B800 * 04C    a........
                                                                        000B0000 000000                     * .......
00000324  000282  003416                             65  C1   PARMR   C10C0000 00684A34 00000000          *
                  003417                                      STATR   4C130000 00684A34 00000000 00000144 *
                  003418  0000                                DATAR   00010308 00759501 01010302 B3B2     * ......n.......
00000325  000267  003371                             65  83   PARMX   83080000 10684A34 50205024          *
                  003372                                      STATX   46110000 0000C4C4 00000000 00000145 *
                  003373  0000                                DATAX   00010308 007D9501 01010302 B3B3     * .....'n.......
00000326  000283  003419    000001 TIMEOUT ELEMENTS SUPPRESSED
00000327  000267  003374                             72  84   PARMX   84080000 10703DBC 50205024          *
                  003375                                      STATX   46110000 0000C4C4 00000000 00000147 *
                  003376  0000                                DATAX   00010308 00759501 01010302 B8B0     * ......n.......
00000328  000283  003421                             72  C3   PARMR   C30C0000 006D9504 00000000          *
                  003422                                      STATR   4C130000 006D9504 00000000 00000148 *
                  003423  0000                                DATAR   00010308 007D9501 01010302 B1B8     * .....'n.......
00000329  000284  003550  0020                       77  85   PARMX   85080000 106CD9DC 50205024          *
                  003551                                      STATX   46110000 0000C4C4 00000000 00000149 *
                  003552        28E0  70  14     INFO         DATAX   08010308 4C807083 040428E0 2D000000 * ....&lt;..c.......
                                                                      00002B00 00100088 12CE4000 20000000 * .......h.. .....
                                                                      00000000 00000326 F1362B03 02144612 * ........1.......
                                                                      801509D5 C5E3C14B C1F07CE3 C4       * ...NETA.A0@TD
00000330  000290  003637    000001 RECEIVE-READY,   000000 RECEIVE-NOT-READY ELEMENTS SUPPRESSED
00000331  000291  003640                             7D  C5   PARMR   C50C0000 006D3278 00000000          *
                  003641  0020                                STATR   4C130000 006E95BC 00000000 0000014B *
                  003642        E02A  15  70     INFO         DATAR   08010308 4C807083 0404E02A 2D000000 * ....&lt;..c.......
                                                                      00002B00 001000AB 12CEC000 A0000000 * ................
                                                                      001E0000 00000C0E F4D5C5E3 C14BC1F8 * ........4NETA.A8
                                                                      F1D50326 F1272B02 00147CE3 C4       * 1N..1.....@TD
00000332  000285  003553    000001 RECEIVE-READY,  000000 RECEIVE-NOT-READY ELEMENTS SUPPRESSED
00000333  000286  003556  0020                    7D  87   PARMX   87080000 1070410C 50205024          *
                  003557                                   STATX   46110000 0000C4C4 00000000 0000014D *
                  003558                                   ATAX   08010308 50817085 C400C202 6EF1FF00 * ....&a.eD.B.>1..
                                                                80000002 00000089 4C0C0037 00000000 * .......i<.......
                                                                00000000 17058000 0603D5C5 E3C10000 * ..........NETA..
                                                                0600C1F4 F4D50000 03267CE3 C4       * ..A44N....@TD
 00000334  000287  003559  0020                    87  88  PARMX 88080000 107041E0 50205024          *
 003560                                                    STATX 46110000 0000C4C4 00000000 0000014E *
 003561                                                    DATAX 08010308 50817085 C400C202 6EF1FF00 * ....&a.eD.B.>1..
                                                                80000002 00000089 4C0C0037 00000000 * .......i<.......
                                                                00000000 17058000 0603D5C5 E3C10000 * ..........NETA..292
                                                                0600C1F4 F4D50000 03267CE3 C4       * ..A44N....@TD
00000335  000292  003643      000002 TIMEOUT ELEMENTS SUPPRESSED
00000337  000288  003562    0020                       9B  89   PARMX   89080000 10701A20 50205024          *
              003563                                        STATX   46110000 0000C4C4 00000000 00000151 *
003564                                                       DATAX  08010308 50817085 C400C202 6EF1FF00 * ....&a.eD.B.>1..
                                                                80000002 00000089 4C0C0037 00000000 * .......i<.......
                                                                00000000 17058000 0603D5C5 E3C10000 * ..........NETA..
                                                                0600C1F4 F4D50000 03267CE3 C4       * ..A44N....@TD
00000338  000294  003647    000004 TIMEOUT ELEMENTS SUPPRESSED
```

Figure 37. Frame-relay physical with BNN HPR data, line trace summary sample report

X.25 data, line trace summary sample report

```
                                                        1
         VTAM                                   ADVANCED COMMUNICATIONS FUNCTION
                                                       TRACE ANALYSIS PROGRAM
         DATE: mm:dd:yyyy                           LINE TRACE SUMMARY (LSPRT)                     PAGE: 00001
        2
X.25  LINE = 0024     PRIMARY    TRACE NUMBER 0000

   3        4      5      6                                                      7                            8
         RECORD  ELEMNT                                                                                DATA TRANSLATION/
  CORR   NUMBER  NUMBER  ADDR  CNTL  NR  NS  PF  CMND  TIME TCC IDENT                 HEX                  EXCEPTION STATUS

00000002  000009  000009  01    53            F   DISC  D7  02   PARMX   02080000 100A7918 015308BC          *
                  000010                                         STATX   44100000 9000D793 00000000 00000002 *
00000003  000008  000001                                D8  00   PARMR   00080000 060A77E8 00000000          *
                  000002  01    1F            F   DM             STATR   44130000 060A77E8 011F0000 00000003 *
00000004  000009  000011  01    3F            F   SABM  D8  03   PARMX   03080000 100A7918 013F08BC          *
                  000012                                         STATX   44100000 9000D793 00000000 00000004 *
00000005  000008  000003                                D8  01   PARMR   01080000 060A77E8 00000000          *
                  000004  01    73            F   UA             STATR   44130000 060A77E8 01730000 00000005 *
00000006  000009  000013  01    00    00  00      INFO  D9  04   PARMX   04082F00 050C9180 010008BC          *
                  000014                                         STATX   46110000 9000D793 00000000 00000006 *
                  000015                                         DATAX   1000FB00 00                         * .....
00000007  000010  000016    000001 RECEIVE-READY,   000000 RECEIVE-NOT-READY ELEMENTS SUPPRESSED
00000008  000010  000018                                B4  03   PARMR   03080000 060A77E8 00000000          *
                  000019  03    2F                SABM           STATR   44130000 060A77E8 032F0000 00000008 *
00000009  000012  000028  03    63                UA    B4  05   PARMX   05082F00 050C9180 036308BC          *
                  000029                                         STATX   44100000 9000D793 00000000 00000009 *
00000010  000012  000030  01    00    00  00      INFO  B6  06   PARMX   06082F00 050CA1E8 010008BC          *
                  000031                                         STATX   46110000 9000D793 00000000 0000000A *
                  000032                                         DATAX   1000FB00 00
```

Figure 38. X.25 data, line trace summary sample report

LUNAME network address cross-reference report

The selection parameter is LUPRT.

This report associates network addresses with logical unit names.

Figure 39 on page 210 shows a sample report.

ACF/TAP supports VTAM full buffer trace data but prints a maximum of 256 bytes per record. Starting with SSP V4R8, the control parameter LONGPIU=YES can be specified, and up to 4096 bytes of VTAM full buffer trace data per PIU is printed. This could be 4096 bytes from one GTF record or 4096 bytes reassembled from multiple GTF records.

The SYSPRINT report displays the complete buffer trace data when DUMP=YES is specified. For more information, see the information about the buffer contents trace in z/OS Communications Server: SNA Diagnosis Vol 2, FFST Dumps and the VIT.

Table 32 on page 209 describes the column headers and the trace data contained in this report type. To locate this information about the sample reports, reference the numbers (n) listed in this table to the corresponding numbers (n) shown in the sample report.

Table 32. LUNAME network address cross-reference report

Reference number (n)	Report column headers and the trace data
1	The page heading contains the report name, report parameter, and the date the report was printed or displayed.
2	**MESSAGE NUMBER** The ACF/TAP-assigned message number.
3	**TYPE** Trace information displayed: **L** Line **B** Buffer or PIU **T** TG Trace **N** NTO Trace
4	**DIR** Message direction as it pertains to the host for buffer trace, and to NCP for line trace. The following values are available: **I** In **O** Out
5	**Form identifier (FID)** One of the following transmission header types: **2** FID2 **4** FID4

Table 32. LUNAME network address cross-reference report (continued)	
Reference number (n)	**Report column headers and the trace data**
6	**OSAF-OEF DSAF-DEF** A 4-byte subarea address followed by a 2-byte element origin address on the first line, and the destination addresses on the second line.
7	**LFSID/OAF DAF** 17-bit FID2 LFSID
8	**SEQNO** The transmission header sequence number in hexadecimal.
9	**PLUNAME/SLUNAME** The primary logical unit name (PLUNAME) appears on the first line, and the secondary logical unit name (SLUNAME) appears on the second line. For more information about PLUNAME/SLUNAME, see the BIND RU description in the z/OS Communications Server: SNA Network Implementation Guide.
10	**PCID** The procedure correlation ID identifies the session. This item also appears if the column header appears as an index number.
11	**DATE** The date in the trace record.
12	**TIME** The time in the trace report.

LUNAME network address cross-reference sample report

```
                                                                                  1
            VTAM                                   ADVANCED COMMUNICATIONS FUNCTION
                                                          TRACE ANALYSIS PROGRAM
             DATE: mm:dd:yyyy                       LUNAME-NETWORK ADDRESS XREF (LUPRT)                        PAGE: 00001
    2         3      4       5         6            7          8            9                  10             11           12
 MESSAGE                                   OSAF-OEF      LFSID /                PLUNAME
 NUMBER     TYPE    DIR     FID     DSAF-DEF      OAF DAF    SEQNO       SLUNAME              PCID            DATE          TIME
 -------    ----    ---     ---   -------------   -------    -----    --------------   ----------------   ----------  ---------------
0000068     B       O       4    0000000C 0061               000E     NET1.CICS12       EC474925AD0E318A   06.04.1999  16.31.40.878245
                                 00000004 0013                        NET1.I04002AA
0000096     L       O       2                     0 01 01    000E     NET1.CICS12       EC474925AD0E318A   06.04.1999  16.31.42.890604
                                                                      NET1.I04002AA
0000127     B       O       4    0000000C 0078               000F     NET1.CICS12       EC474925AD0E318B   06.04.1999  16.31.46.138200
                                 00000004 0013                        NET1.I04002AA
0000128     B       O       4    0000000C 007A               0010     NET1.CICS12       EC474925AD0E318C   06.04.1999  16.31.46.168836
                                 00000004 0013                        NET1.I04002AA
0000137     L       O       2                     0 01 02    000F     NET1.CICS12       EC474925AD0E318B   06.04.1999  16.31.46.589638
                                                                      NET1.I04002AA
0000138     L       O       2                     0 01 03    0010     NET1.CICS12       EC474925AD0E318C   06.04.1999  16.31.46.589685
                                                                      NET1.I04002AA
0000157     B       I       4    00000004 006B               0000     I04002AA          271F2E0F134C281D   06.04.1999  16.31.49.117787
                                 0000000C 0062                        CICS12
0000162     L       I       2                     1 01 01    0000     I04002AA          271F2E0F134C281D   06.04.1999  16.31.49.303153
                                                                      CICS12
0000170     L       I       2                     1 01 02    0000     I04002AA          271F2E0F134C281E   06.04.1999  16.31.49.303248
                                                                      CICS12
0000174     B       I       4    00000004 006C               0000     I04002AA          271F2E0F134C281E   06.04.1999  16.31.49.592254
                                  0000000C 0062                        CICS12
```

Figure 39. LUNAME network address cross-reference sample report

Network data traffic report

The selection parameter is DTPRT.

Figure 40 on page 211 shows a sample report.

This report is a hexadecimal and character format printout of the request and response units that have data associated with them. ACF/TAP formats only the data that remains following the analysis of the transmission header, request header, and request and response unit command bytes, and a summary of any network commands.

ACF/TAP supports VTAM full buffer trace data but prints a maximum of 256 bytes per record. Starting with SSP V4R8, the control parameter LONGPIU=YES can be specified, and up to 4096 bytes of VTAM full buffer trace data per PIU will be printed. This could be 4096 bytes from one GTF record or 4096 bytes reassembled from multiple GTF records.

The SYSPRINT report displays the complete buffer trace data when DUMP=YES is specified. For further information, see the information about the buffer contents trace in z/OS Communications Server: SNA Diagnosis Vol 2, FFST Dumps and the VIT.

Table 33. Network data traffic report description

Reference number (n)	Report column headers and the trace data
1	The page heading contains the report name, report parameter, and the date the report was printed or displayed.
2	**MESSAGE NUMBER** The ACF/TAP-assigned sequence number.
3	**GROUP SUMMARY** The source of the data.
4	**MESSAGE DATA** Data in hexadecimal format.
5	This is the EBCDIC equivalent of the hexadecimal message data.
6	**ENTRY SUMMARY** The summary of any network commands.

VTAM full buffer trace data (LONGPIU=YES), network data traffic sample report

```
                                                                    1
            VTAM                                      ADVANCED COMMUNICATIONS FUNCTION
                                                             TRACE ANALYSIS PROGRAM
            DATE: mm:dd:yyyy                              NETWORK DATA TRAFFIC (DTPRT)                        PAGE: 00001

     2         3                                                  4                                    5                          6
  RECORD/    GROUP                                                                                                            ENTRY
  MESSAGE   SUMMARY                                          M E S S A G E   D A T A                                        SUMMARY

 /0000002
  0000001  USER DATA  *00005B03  038000                                                          *..$....                    *  INIT-OTHER

 /0000003
  0000002  USER DATA  *002A0000  00000000  3B010303  B1A03040  00070000  87000000  00000000 *............... ....g.......*  CINIT
                      *00000000  00000900  00000000  00000000  07C5C3C8  D6C1F0F1  000E0000 *.........................*
                      *00000100  FD000008  00000001  F307C5C3  C8D6C1F0  F2000008  E2C9D4D3 *.........................*
                      *D6C7D6D5  000E01C0  6D000000  80000000  00000000  000D44C9  D5E3C5D9 *.........................*
                      *C1C3E340  40404040  40404033  00011800  00000100  02010001  01010202 *.........................*
                      *00020102  02030003  01030204  00040104  02050005  01050206  00060106 *.........................*
                      *02070007  01070215  14000000  0100C300  00000201  22D5C5E3  C1404040 *.........................*
                      *400E0DF3  D5C5E3C1  4BC5C3C8  D6C1F0F1  0E0DF3D5  C5E3C14B  C5C3C8D6 *.........................*
                      *C1F0F22C  0A010840  40404040  4040402D  0908C9D5  E3C5D9C1  C3E36012 *.........................*
                      *E7F38956  9E10463D  09D5C5E3  C14BC1F0  F1D52F03  0380403F  0180     *........................  *

 /0000005
  0000004  USER DATA  *010303B1  A0304200  87000087  00000000  00000000  00000000  000007C5 *........g..g..............E*  BIND
                      *C3C8D6C1  F0F10000  07C5C3C8  D6C1F0F2  6012E7F3  89569E10  463D09D5 *CHOA01...ECHOA02-.X3i......N*
                      *C5E3C14B  C1F0F1D5  0E0DF3D5  C5E3C14B  C5C3C8D6  C1F0F12C  0A010840 *ETA.A01N..3NETA.ECHOA01.... *
                      *40404040  4040402D  0908C9D5  E3C5D9C1  C3E3                         *       ...INTERACT          *

 /0000006
  0000005  USER DATA  *01000000  00000200  80000080  00000000  00000000  00000000  00000000 *.........................*  BIND
                      *00006012  E7F38956  9E10463D  09D5C5E3  C14BC1F0  F1D5               *..-.X3i......NETA.A01N      *

 /0000007
  0000006  USER DATA  *01150C00  00000100  C3000000  0201221E  03000000  6012E7F3  89569E10 *........C...........-.X3i...*  SESSST
                      *463D09D5  C5E3C14B  C1F0F1D5                                          *...NETA.A01N                *

 /0000011
  0000009  USER DATA  *C5C3C8D6  C1F0F140  0000D5C5  E3C14040  40400000  40D9C5C1  C4E840C6 *ECHOA01 ..NETA    .. READY F*
                      *D6D940C6  C9D9E2E3  40C9D5D7  E4E34B40  D3D6C7D6  D540C4C1  E3C1407E *OR FIRST INPUT. LOGON DATA =*
                      *40E2C9D4  D3D6C7D6  D515                                              * SIMLOGON.                  *

 /0000012
  0000010  USER DATA  *000007                                                                *...                        *  IPR/IPM
```

Figure 40. VTAM full buffer trace data (LONGPIU=YES), network data traffic sample report

Network error report

The selection parameter is NEPRT.

Figure 41 on page 212 shows a sample report.

This report lists the error messages and a one line summary (such as incorrect commands, sense codes, or BIND failures) of error conditions that have occurred in the network. See Figure 1 on page 4 to see the trace data that can be produced on each report.

ACF/TAP supports VTAM full buffer trace data but prints a maximum of 256 bytes per record. Starting with SSP V4R8, the control parameter LONGPIU=YES can be specified, and up to 4096 bytes of VTAM full buffer trace data per PIU are printed. This could be 4096 bytes from one GTF record or 4096 bytes reassembled from multiple GTF records.

The SYSPRINT report displays the complete buffer trace data when DUMP=YES is specified. For more information, see the information about the buffer contents trace in z/OS Communications Server: SNA Diagnosis Vol 2, FFST Dumps and the VIT.

Table 34 on page 212 describes the column headers and the trace data contained in this report type. To locate this information about the sample reports, reference the numbers (n) listed in this table to the corresponding numbers (n) shown in the sample report.

Table 34. Network error report description

Reference number (n)	Report column headers and the trace data
1	The page heading contains the report name, report parameter, and the date the report was printed or displayed.
2	**ERROR** Identification of error messages. Messages DSJ100I through DSJ199I are described in Appendix A, “Messages,” on page 57.
3	**MESSAGE NUMBER** The ACF/TAP-assigned sequence number.
4	**ADDITIONAL INFORMATION** The sense data in hexadecimal format for message DSJ126I.
5	**SUMMARY** A single keyword that summarizes the error condition. It is self-explanatory.

Network error report sample

```
                                                        1
          VTAM                                   ADVANCED COMMUNICATIONS FUNCTION
                                                      TRACE ANALYSIS PROGRAM
          DATE: mm:dd:yyyy                         NETWORK ERROR ANALYSIS (NEPRT)                          PAGE: 00001

   2          3                                                          4                                          5
 ERROR  MESSAGE  NUMBER   E R R O R  C O N D I T I O N            A D D I T I O N A L  I N F O R M A T I O N          SUMMARY
DSJ126I MESSAGE 0000707 SENSE DATA FIELD PRESENT         081E0000   SESSION REFERENCE ERROR                        SENSE DATA
DSJ126I MESSAGE 0000826 SENSE DATA FIELD PRESENT         08720000   ORDERLY DEACTIVATION REFUSED                   SENSE DATA
DSJ126I MESSAGE 0003235 SENSE DATA FIELD PRESENT         80050000   NO SESSION ESTABLISHED                         SENSE DATA
DSJ126I MESSAGE 0003261 SENSE DATA FIELD PRESENT         08090000   MODE INCONSISTENCY                             SENSE DATA
DSJ126I MESSAGE 0003462 SENSE DATA FIELD PRESENT         08390000   LU(SSCP)-LU SESSION TAKE DOW                   SENSE DATA
DSJ126I MESSAGE 0003469 SENSE DATA FIELD PRESENT         08390000   LU(SSCP)-LU SESSION TAKE DOW                   SENSE DATA
DSJ126I MESSAGE 0003477 SENSE DATA FIELD PRESENT         80050000   NO SESSION ESTABLISHED                         SENSE DATA
DSJ126I MESSAGE 0003491 SENSE DATA FIELD PRESENT         081E0000   SESSION REFERENCE ERROR                        SENSE DATA
DSJ126I MESSAGE 0003706 SENSE DATA FIELD PRESENT         80050000   NO SESSION ESTABLISHED                         SENSE DATA
DSJ147I MESSAGE 0003766 X-DOMAIN SESSION SETUP FAILURE                                                               CDSESSSF
DSJ147I MESSAGE 0003772 X-DOMAIN SESSION SETUP FAILURE                                                               CDSESSSF
DSJ126I MESSAGE 0004526 SENSE DATA FIELD PRESENT         08720000   ORDERLY DEACTIVATION REFUSED                   SENSE DATA
```

Figure 41. Network error report sample

SNA detail reports

The selection parameter is SDPRT.

This topic contains SNA detail reports. See the following figures:

- Figure 42 on page 215
- Figure 43 on page 215
- Figure 44 on page 216
- Figure 45 on page 216
- Figure 54 on page 228
- Figure 47 on page 217
- Figure 48 on page 218
- Figure 49 on page 219
- Figure 50 on page 220

This report lists the error messages and a one line summary (such as incorrect commands, sense codes, or BIND failures) of error conditions that have occurred in the network. See Figure 1 on page 4 to see the trace data that can be produced on each report.

For INPUT=BUFFER or PIU, ACF/TAP produces one group of lines for each record. For INPUT=BUFFER or PIU, if LONGPIU=YES is specified, ACF/TAP produces one group of lines for each assembled message. For NCP line trace, ACF/TAP produces one group of lines for each assembled message. Each entry group shows a complete ACF/TAP analysis of the SNA and SDLC protocols used in the message.

The number of lines on each page can vary slightly from the assigned line count when you specify LONGPIU=YES.

Table 35 on page 213 describes the column headers and the trace data contained in this report type. To locate this information about the sample reports, reference the numbers (n) listed in this table to the corresponding numbers (n) shown in the sample reports.

Table 35. SNA detail report description

Report description	Report column headers and the trace data
1	This heading contains the report name, report parameter, and the date the report was printed or displayed.
2	**MESSAGE NUMBER** The ACF/TAP-assigned sequence number for this message.

Table 35. SNA detail report description (continued)	
Report description	**Report column headers and the trace data**
3	GROUP SUMMARY **TIMESTAMP** (Alternate report only) Includes network addresses and network names. **DATA FLOW** Flow of data for indicated message. **ANR** Automatic network routing. **NLP** Network layer packet. **RH** Request response header **RU** Request/response unit **SDLC ADDR/CMD SDLC address/command** (Alternate report) **TH** Transmission header Alternate report only: **CV** Control vector. **UD** User data **CONTINUED** Indicates a continuation of previous data **USER DATA** Standard report only
4	**DESCRIPTIVE ANALYSIS** Detailed description of data listed under GROUP SUMMARY in this table.
5	**ENTRY SUMMARY** A summary of any network commands.

Communications line adapter PIU data SNA detail sample report

For more information about the report shown in Figure 42 on page 215, see “CSS adapter trace reports” on page 168.

```
          VTAM                                ADVANCED COMMUNICATIONS FUNCTION
                                                     TRACE ANALYSIS PROGRAM
           DATE: mm:dd:yyyy                 SYSTEMS NETWORK ARCHITECTURE DETAIL (SDPRT)                    PAGE: 00001

     2      3                                                4                                                          5
RECORD/    GROUP                                                                                                     ENTRY
 MESSAGE  SUMMARY                                D E S C R I P T I V E   A N A L Y S I S                            SUMMARY
0000130
 0000001 DATA FLOW   C1 BF
         SDLC CMND     SDLC UNNUMBERED RESPONSE       XID  - EXCHANGE IDENTIFICATION   POLL/FINAL = ON                      XID
0000145
 0000002 DATA FLOW   C1 BF
         SDLC CMND     SDLC UNNUMBERED RESPONSE       XID  - EXCHANGE IDENTIFICATION   POLL/FINAL = ON                      XID
 0000003 DATA FLOW   C1 BF
         SDLC CMND     SDLC UNNUMBERED RESPONSE       XID  - EXCHANGE IDENTIFICATION   POLL/FINAL = ON                      XID
 0000004 DATA FLOW   C1 BF
         SDLC CMND     SDLC UNNUMBERED RESPONSE       XID  - EXCHANGE IDENTIFICATION   POLL/FINAL = ON                      XID
 0000005 DATA FLOW   C1 BF
         SDLC CMND     SDLC UNNUMBERED RESPONSE       XID  - EXCHANGE IDENTIFICATION   POLL/FINAL = ON                      XID
0000148
 0000006 DATA FLOW   C1 BF
         SDLC CMND     SDLC UNNUMBERED RESPONSE       XID  - EXCHANGE IDENTIFICATION   POLL/FINAL = ON                      XID
 0000007 DATA FLOW   C1 BF
         SDLC CMND     SDLC UNNUMBERED RESPONSE       XID  - EXCHANGE IDENTIFICATION   POLL/FINAL = ON                      XID
 0000008 DATA FLOW   C1 BF
         SDLC CMND     SDLC UNNUMBERED RESPONSE       XID  - EXCHANGE IDENTIFICATION   POLL/FINAL = ON                      XID
 0000009 DATA FLOW   C1 BF
         SDLC CMND     SDLC UNNUMBERED RESPONSE       XID  - EXCHANGE IDENTIFICATION   POLL/FINAL = ON                      XID
 0000010 DATA FLOW   C1 BF
         SDLC CMND     SDLC UNNUMBERED RESPONSE       XID  - EXCHANGE IDENTIFICATION   POLL/FINAL = ON                      XID
```

Figure 42. Communications line adapter PIU data SNA detail sample report

Frame-relay data, SNA detail sample report

ACF/TAP treats frame-relay switching equipment (FRSE) data as non-SNA; therefore, FRSE data does not appear on the report shown in Figure 43 on page 215.

```
          VTAM                                ADVANCED COMMUNICATIONS FUNCTION
                                                     TRACE ANALYSIS PROGRAM
           DATE: mm:dd:yyyy                 SYSTEMS NETWORK ARCHITECTURE DETAIL (SDPRT)                    PAGE: 00001

     2      3                                                4                                                          5
RECORD/    GROUP                                                                                                     ENTRY
 MESSAGE  SUMMARY                                D E S C R I P T I V E   A N A L Y S I S                            SUMMARY
0000013
 0000010 DATA FLOW   40 00 11 11 20 00 00 0C 00 00 00 03 00 00 00 14 1C 00 00 00 00 00 00 04 00 0B 8B 80 00 01 02 0A 00
                     03 0F 01 D0
                     TIMESTAMP: 13.59.53.337525
         TH  00-02   FORMAT ID (FID):  4 * TG SWEP:OFF  MIG:OFF  PCI:OFF * NET PRI:OFF              IERN: 01 ERN: 01 *
         TH  03-04   VR NUMBER (VRN):  1 * VRCWI: INC  TG REORDR REQD: 0 * TP PRI:  1       TG SEQUENCE NUMBER:   000 *
         TH  04-06   VRCWRI: R VRRWI:  0 * SINGLY SEQUENCED DATA         *                 VR SEQUENCE NUMBER:   00C *
         TH  06-     VR PACING: NONE     * ORIGIN: 00000014 0000         *                SNF SEQUENCE NUMBER:  0004 *
         TH    -25   SEGMENT(MPF):ONLY   * DESTINATION: 00000003 0000    * FLOW: NORMAL            COUNT (DCF): 00011 *
         RH  00-02   RU TYPE: FM DATA FLOW      +RESPONSE* RESPONSE/REQUEST: DR1              * CHAIN: ONLY ELEMENT   *
                     RU FORMAT:   FORMATTED             * PACING INDICATOR: OFF             *                         *
         RU  00-                        SSCP SERVICES: 02 - CONFIGURATION    COMMAND: 0A - ACTIVATE LINK                  ACTLINK
 0000010 USER DATA  *.....                                                                                              *
0000029
 0000025 DATA FLOW   00 10 BF 24 2C FF F0 00 00 00 00 40 08 00 08 3A 02 00 00 00 15 00 00 D2 E3 F3 E2 C1 F2 F1 40 81 00
                     01 30 04 26 00 B8 00 00 07 00 00 00 00 00
         SDLC CMND     SDLC UNNUMBERED COMMAND        XID  - EXCHANGE IDENTIFICATION   POLL/FINAL = ON                      XID
 0000027 DATA FLOW   00 10 BF 24 2C FF F0 00 00 00 00 40 08 00 08 3A 02 00 00 00 15 00 00 D2 E3 F3 E2 C1 F2 F1 40 81 00
                     01 30 04 26 00 B8 00 00 07 00 00 00 00 00
         SDLC CMND     SDLC UNNUMBERED COMMAND        XID  - EXCHANGE IDENTIFICATION   POLL/FINAL = ON                      XID
0000030
 0000029 DATA FLOW   00 10 BF 24 2C FF F0 00 00 00 00 40 08 00 08 3A 02 00 00 00 15 00 00 D2 E3 F3 E2 C1 F2 F1 40 81 00
                     01 30 04 26 00 B8 00 00 07 00 00 00 00 00
         SDLC CMND     SDLC UNNUMBERED COMMAND        XID  - EXCHANGE IDENTIFICATION   POLL/FINAL = ON                      XID
0000031
 0000031 DATA FLOW   00 10 BF 24 2C FF F0 00 00 00 00 40 08 00 08 3A 02 00 00 00 15 00 00 D2 E3 F3 E2 C1 F2 F1 40 81 00
                     01 30 04 26 00 B8 00 00 07 00 00 00 00 00
         SDLC CMND     SDLC UNNUMBERED COMMAND        XID  - EXCHANGE IDENTIFICATION   POLL/FINAL = ON                      XID
 0000033 DATA FLOW   00 10 BF 24 2C FF F0 00 00 00 00 40 08 00 08 3A 02 00 00 00 15 00 00 D2 E3 F3 E2 C1 F2 F1 40 81 00
                     01 30 04 26 00 B8 00 00 07 00 00 00 00 00
         SDLC CMND     SDLC UNNUMBERED COMMAND        XID  - EXCHANGE IDENTIFICATION   POLL/FINAL = ON                      XID
0000032
 0000035 DATA FLOW   00 10 BF 24 2C FF F0 00 00 00 00 40 08 00 08 3A 02 00 00 00 15 00 00 D2 E3 F3 E2 C1 F2 F1 40 81 00
                     01 30 04 26 00 B8 00 00 07 00 00 00 00 00
         SDLC CMND     SDLC UNNUMBERED COMMAND        XID  - EXCHANGE IDENTIFICATION   POLL/FINAL = ON                      XID
 0000037 DATA FLOW   00 10 BF 24 2C FF F0 00 00 00 00 40 08 00 08 3A 02 00 00 00 15 00 00 D2 E3 F3 E2 C1 F2 F1 40 81 00
                     01 30 04 26 00 B8 00 00 07 00 00 00 00 00
         SDLC CMND     SDLC UNNUMBERED COMMAND        XID  - EXCHANGE IDENTIFICATION   POLL/FINAL = ON                      XID
0000034
 0000039 DATA FLOW   00 10 BF 24 2C FF F0 00 00 00 00 40 08 00 08 3A 02 00 00 00 15 00 00 D2 E3 F3 E2 C1 F2 F1 40 81 00
                     01 30 04 26 00 B8 00 00 07 00 00 00 00 00
         SDLC CMND     SDLC UNNUMBERED COMMAND        XID  - EXCHANGE IDENTIFICATION   POLL/FINAL = ON                      XID
```

Figure 43. Frame-relay data, SNA detail sample report

Frame-relay with BNN HPR data, SNA detail sample report

```
          VTAM                                ADVANCED COMMUNICATIONS FUNCTION
                                                    TRACE ANALYSIS PROGRAM
           DATE: mm:dd:yyyy                 SYSTEMS NETWORK ARCHITECTURE DETAIL (SDPRT)                    PAGE: 00001

      2       3                                            4                                                          5
  RECORD/    GROUP                                                                                                 ENTRY
   MESSAGE  SUMMARY                              D E S C R I P T I V E   A N A L Y S I S                          SUMMARY

  0000301
   0000288 DATA FLOW   00 20 C4 00 C2 02 6E F1 FF 00 80 00 00 02 00 00 00 89 4C 0C 00 37 00 00 00 00 00 00 00 00 17 05 80
                       00 06 03 D5 C5 E3 C1 00 00 06 00 C1 F4 F4 D5 00 00 03 26 7C
           SDLC CMND   SDLC DATA TRANSMIT
                       TIMESTAMP: 14.24.05.091535
           NLP 00-01   C4 00
           ANR 02-07   C2 02 6E F1 FF 00
   0000288 USER DATA  *D.B.>1.........i<................NETA....A44N....@TD                                        *
   0000289 DATA FLOW   00 20 C4 00 C2 02 6E F1 FF 00 80 00 00 02 00 00 00 89 4C 0C 00 37 00 00 00 00 00 00 00 00 17 05 80
                       00 06 03 D5 C5 E3 C1 00 00 06 00 C1 F4 F4 D5 00 00 03 26 7C
           SDLC CMND   SDLC DATA TRANSMIT
                       TIMESTAMP: 14.24.05.091535
           NLP 00-01   C4 00
           ANR 02-07   C2 02 6E F1 FF 00
   0000289 USER DATA  *D.B.>1.........i<................NETA....A44N....@TD                                        *
  0000306
   0000291 DATA FLOW   00 20 E0 2A 2D 00 00 00 00 00 2B 00 00 10 00 AB 12 CE C0 00 A0 00 00 00 00 1E 00 00 00 00 0C 0E F4
                       D5 C5 E3 C1 4B C1 F8 F1 D5 03 26 F1 27 2B 02 00 14 7C E3 C4
           SDLC CMND   SDLC DATA RECEIVED                 RECEIVE (021)   SEND (112)    POLL/FINAL = OFF                    INFO
                       TIMESTAMP: 14.24.15.109585
           TH  00-00   FORMAT ID (FID): 2 * SEGMENT (MPF): ONLY   * ORIGINATOR (ODAI): PRIMARY  * FLOW (EFI): EXPEDITED *
           TH  02-05   ORIGIN (OAF): 00   DESTINATION (DAF): 00   * SEQUENCE NUMBER (SNF):0000  *                      *
           RH  00-02   RU TYPE: NETWORK CONTROL   REQUEST  * RESPONSE/REQUEST:                 * CHAIN: ONLY ELEMENT   *
                       RU FORMAT:   FORMATTED              * PACING INDICATOR: OFF             *                       *
                       BRACKET:                            * CHANGE DIRECTION INDICATOR: OFF    * CODE SEL:EBCDIC       *
           RU  00-     COMMAND: RT SETUP  ROUTE SETUP GDS        CMD DATA: 00 AB 12 CE C0 00 A0 00 00 00 00 1E 00 00      Q RT SETUP
   0000291 USER DATA  *.................4NETA.A81N..1.....@TD                                                       *
  0000315
   0000306 DATA FLOW   00 20 C4 00 C2 02 6E F1 FF 00 80 00 00 02 00 00 00 89 4C 0C 00 37 00 00 00 00 00 00 00 00 17 05 80
                       00 06 03 D5 C5 E3 C1 00 00 06 00 C1 F4 F4 D5 00 00 03 26 7C
           SDLC CMND   SDLC DATA TRANSMIT
                       TIMESTAMP: 14.24.18.418930
           NLP 00-01   C4 00
           ANR 02-07   C2 02 6E F1 FF 00
   0000306 USER DATA  *D.B.>1.........i<................NETA....A44N....@TD                                        *
```

Figure 44. Frame-relay with BNN HPR data, SNA detail sample report

FMH5, SNA detail sample report

The report shown in Figure 45 on page 216 shows the FMH5 format RUs.

```
          VTAM                                ADVANCED COMMUNICATIONS FUNCTION
                                                    TRACE ANALYSIS PROGRAM
           DATE: mm:dd:yyyy                 SYSTEMS NETWORK ARCHITECTURE DETAIL (SDPRT)                    PAGE: 00001

      2       3                                            4                                                          5
  RECORD/    GROUP                                                                                                 ENTRY
   MESSAGE  SUMMARY                              D E S C R I P T I V E   A N A L Y S I S                          SUMMARY
   0000271 DATA FLOW   C1 91
           SDLC CMND   SDLC  SUPERVISORY RESPONSE       RECEIVE READY      RECEIVE (004) POLL/FINAL = ON                RR
   0000272 DATA FLOW   C1 31
           SDLC CMND   SDLC  SUPERVISORY RESPONSE       RECEIVE READY      RECEIVE (001) POLL/FINAL = ON                RR
   0000273 DATA FLOW   C1 91
           SDLC CMND   SDLC  SUPERVISORY RESPONSE       RECEIVE READY      RECEIVE (004) POLL/FINAL = ON                RR
  0000403
   0000274 DATA FLOW   C1 31
           SDLC CMND   SDLC  SUPERVISORY RESPONSE       RECEIVE READY      RECEIVE (001) POLL/FINAL = ON                RR
   0000275 DATA FLOW   C1 91
           SDLC CMND   SDLC  SUPERVISORY RESPONSE       RECEIVE READY      RECEIVE (004) POLL/FINAL = ON                RR
   0000276 DATA FLOW   C1 31
           SDLC CMND   SDLC  SUPERVISORY RESPONSE       RECEIVE READY      RECEIVE (001) POLL/FINAL = ON                RR
   0000277 DATA FLOW   C1 91
           SDLC CMND   SDLC  SUPERVISORY RESPONSE       RECEIVE READY      RECEIVE (004) POLL/FINAL = ON                RR
  0000404
   0000278 DATA FLOW   C1 31
           SDLC CMND   SDLC  SUPERVISORY RESPONSE       RECEIVE READY      RECEIVE (001) POLL/FINAL = ON                RR
   0000279 DATA FLOW   C1 82 2C 00 00 02 00 01 0B 91 20 0E 05 02 FF 00 03 D0 00 00 04 22 F0 F0 F1 00 0C 12 C1 00 00 00 06
                       F6 BC 40 00
           SDLC CMND   SDLC DATA TRANSMITTED               RECEIVE (004)   SEND (001)    POLL/FINAL = OFF                    INFO
                       TIMESTAMP: 17.27.42.865900
           TH  00-00   FORMAT ID (FID): 2 * SEGMENT (MPF): ONLY   * ORIGINATOR (ODAI): PRIMARY  * FLOW (EFI): NORMAL    *
           TH  02-05   ORIGIN (OAF): 02   DESTINATION (DAF): 00   * SEQUENCE NUMBER (SNF):0001  *                      *
           RH  00-02   RU TYPE: FM DATA FLOW      REQUEST  * RESPONSE/REQUEST: DR1     ERI      * CHAIN: ONLY ELEMENT   *
                       RU FORMAT:   FORMATTED              * PACING INDICATOR: ON              *                       *
                       BRACKET:                            * CHANGE DIRECTION INDICATOR: ON     * CODE SEL:EBCDIC       *
           RU  00-03   FMH5 LENGTH (0E)  FMH5 TYPE(05)  FMH5 COMMAND(02FF) ATTACH
               04-04   SECURITY INDICATOR = (0) USER ID VERIFIED      PIP(0) PIP NOT PRESENT FOLLOWING FMH5
               05-06   FIXED LENGTH PARAMETER(03)  RESOURSE TYPE(D0) BASIC CONVERSION
               07-08   SYNCHRONIZATION LEVEL(00) NONE
               09-     TRANSACTION PROGRAM NAME FIELD = 22F0F0F1
```

Figure 45. FMH5, SNA detail sample report

NTO data, SNA detail sample report

The report shown in Figure 46 on page 217 is a composite that shows FID0, FID1, FID2, and FID3.

```
          VTAM                                ADVANCED COMMUNICATIONS FUNCTION
                                                    TRACE ANALYSIS PROGRAM
           DATE: mm:dd:yyyy                 SYSTEMS NETWORK ARCHITECTURE DETAIL (SDPRT)                    PAGE: 00001

     2       3                                          4                                                          5
 RECORD/    GROUP                                                                                            ENTRY
  MESSAGE  SUMMARY                              D E S C R I P T I V E  A N A L Y S I S                       SUMMARY
 0000004
  0000003 DATA FLOW   0C 00 00 06 00 12 29 84 00 0A 03 80 00 00 08 50 00 80 00 00 00 00 00 0A DF EA 00 00 00 00 00 00 00
                      00 00 00 00 00 00
                      TIMESTAMP: 10.26.51.084360
          TH  00-00   FORMAT ID (FID): 0 * SEGMENT (MPF): ONLY   *                            * FLOW (EFI): NORMAL    *
          TH  02-09   ORIGIN (OAF): 0012 DESTINATION (DAF): 0006 * SEQUENCE NUMBER (SNF):2984  * COUNT (DCF):  00010   *
          RH  00-02   RU TYPE: FM DATA FLOW      REQUEST  * RESPONSE/REQUEST: DR1              * CHAIN: ONLY ELEMENT   *
                      RU FORMAT: UNFORMATTED              * PACING INDICATOR: OFF              *                       *
                      BRACKET:                            * CHANGE DIRECTION INDICATOR: OFF    * CODE SEL:EBCDIC       *
          RU  00-06   COMMAND: 08  CONTROL               MODIFIER: 50-RESET CONDITIONAL              FLAGS: 00  80       RST COND
                      FUNCTION FLAGS: 00000000                            BTU FLAGS: 10000000
                                                                                      |_________RESET ERROR LOCK
                      RESPONSE: 00 NORMAL  PHASE: 0-BTU VALIDATION  CODE: 00 INVALID BIT CONFIGURATION      EXTENDED: 00
                      LEADING GRAPHICS: NO   LINE STATUS(I): 0-CONTROL MODE    (F): TIME OUT
  0000003 USER DATA  *...................                                                                          *
 0000006
  0000005 DATA FLOW   0E 00 00 12 00 06 29 83 00 0A 8B 90 00 8D 05 04 50 00 BE 8C C5 C3 C8 0D EB D2 40 40 40 40 D5 C5 E3
                      C1 40 40 40 40 40
                      TIMESTAMP: 10.26.51.188949
          TH  00-00   FORMAT ID (FID): 0 * SEGMENT (MPF): ONLY   *                            * FLOW (EFI): NORMAL    *
          TH  02-09   ORIGIN (OAF): 0006 DESTINATION (DAF): 0012 * SEQUENCE NUMBER (SNF):2983  * COUNT (DCF):  00010   *
          RH  00-02   RU TYPE: FM DATA FLOW      -RESPONSE* RESPONSE/REQUEST: DR1     ERI      * CHAIN: ONLY ELEMENT   *
                      RU FORMAT:   FORMATTED              * PACING INDICATOR: OFF              *                       *
          RU  00-06   COMMAND: 05  INVITE                MODIFIER: 04-INVITE TRANSMISSION WITH DISC  FLAGS: 50  00       INV DISC
                      FUNCTION FLAGS: 01010000                            BTU FLAGS: 00000000
                                     | |______FIRST BLOCK OF MESSAGE
                                     |________HEADER PREFIX
                      RESPONSE: BE ERROR   PHASE: 1-DATA LINK I/O   CODE:    CMD REJ - LINE DEACT/CMD RSET  EXTENDED: 8C
                      LEADING GRAPHICS: NO   LINE STATUS(I): 4-SPECIAL         (F): RESET HAS OCCURED
  0000005 USER DATA  *ECH..K    NETA                                                                               *
 0000008
  0000007 DATA FLOW   0E 00 00 12 00 06 29 84 00 0A 8B 80 00 8E 08 50 00 80 60 00 00 00 00 0A DF EA 00 00 00 00 00 00 00
                      00 00 00 00 00 00
                      TIMESTAMP: 10.26.51.190167
          TH  00-00   FORMAT ID (FID): 0 * SEGMENT (MPF): ONLY   *                            * FLOW (EFI): NORMAL    *
          TH  02-09   ORIGIN (OAF): 0006 DESTINATION (DAF): 0012 * SEQUENCE NUMBER (SNF):2984  * COUNT (DCF):  00010   *
```

Figure 46. NTO data, SNA detail sample report

SDLC with BNN HPR data, SNA detail sample report

```
          VTAM                                ADVANCED COMMUNICATIONS FUNCTION
                                                    TRACE ANALYSIS PROGRAM
           DATE: mm:dd:yyyy                 SYSTEMS NETWORK ARCHITECTURE DETAIL (SDPRT)                    PAGE: 00001

     2       3                                          4                                                          5
 RECORD/    GROUP                                                                                            ENTRY
  MESSAGE  SUMMARY                              D E S C R I P T I V E  A N A L Y S I S                       SUMMARY

          0000006 RR  0000000 RNR                ELEMENTS SUPPRESSED
 0000003
  0000007 DATA FLOW   C1 22
          SDLC CMND   SDLC DATA RECEIVED                 RECEIVE (001)   SEND (001)    POLL/FINAL = OFF                    INFO
  0000008 DATA FLOW   C1 22 2C 00 01 01 00 01 03 C4 E4 D4 D4 E8 40 C4 C1 E3 C1 40 C3 D6 D4 D4 C1 D5 C4
          SDLC CMND   SDLC DATA RECEIVED                 RECEIVE (001)   SEND (001)    POLL/FINAL = OFF                    INFO
                      TIMESTAMP: 12.02.59.652537
          TH  00-00   FORMAT ID (FID): 2 * SEGMENT (MPF): ONLY   * ORIGINATOR (ODAI): PRIMARY  * FLOW (EFI): NORMAL    *
          TH  02-05   ORIGIN (OAF): 01   DESTINATION (DAF): 01   * SEQUENCE NUMBER (SNF):0001  *                       *
          RH  00-02   RU TYPE: FM DATA FLOW      REQUEST  * RESPONSE/REQUEST: DR1              * CHAIN: ONLY ELEMENT   *
                      RU FORMAT: UNFORMATTED              * PACING INDICATOR: OFF              *                       *
                      BRACKET ; BEGIN BRACKET END BRACKET *  CHANGE DIRECTION INDICATOR: ON     * CODE SEL ; EBCDIC    *
  0000008 USER DATA  *MMY DATA COMMAND                                                                               *
          0000008 RR  0000000 RNR                ELEMENTS SUPPRESSED
 0000004
  0000017 DATA FLOW   C1 44
          SDLC CMND   SDLC DATA RECEIVED                 RECEIVE (002)   SEND (002)    POLL/FINAL = OFF                    INFO
 0000005
  0000018 DATA FLOW   C1 44 C2 01 C1 00 62 02 FF 00 11 11 11 11 11 11 11 11 11 11 11 11 11 11 11 11
          SDLC CMND   SDLC DATA RECEIVED                 RECEIVE (002)   SEND (002)    POLL/FINAL = OFF                    INFO
                      TIMESTAMP: 12.02.59.652603
          NLP 00-01   C2 01
          ANR 02-06   C1 00 62 02 FF
          THIS IS A BNN ROUTING LABEL      DEF = 0062  TPF = MEDIUM
  0000018 USER DATA  *B.A...................                                                                         *
          0000007 RR  0000000 RNR                ELEMENTS SUPPRESSED
```

Figure 47. SDLC with BNN HPR data, SNA detail sample report

Token-ring with BNN HPR data, SNA detail sample report

```
            VTAM                                   ADVANCED COMMUNICATIONS FUNCTION
                                                         TRACE ANALYSIS PROGRAM
            DATE: mm:dd:yyyy                 SYSTEMS NETWORK ARCHITECTURE DETAIL (SDPRT)                    PAGE: 00001

       2       3                                                  4                                                                  5
   RECORD/    GROUP                                                                                                             ENTRY
    MESSAGE  SUMMARY                              D E S C R I P T I V E   A N A L Y S I S                                       SUMMARY

            ANR 02-06   C0 00 56 02 FF
            THIS IS A BNN ROUTING LABEL      DEF = 0056  TPF = LOW
    0000010 USER DATA  *B..................BNN                                                                                  *
    0000011 DATA FLOW   C2 01 C0 00 56 02 FF 00 01 02 03 04 05 06 07 08 09 10 11 12 C2 D5 D5
            SDLC CMND   SDLC DATA RECEIVED
                        TIMESTAMP: 15.41.17.792787
            NLP 00-01   C2 01
            ANR 02-06   C0 00 56 02 FF
            THIS IS A BNN ROUTING LABEL      DEF = 0056  TPF = LOW
    0000011 USER DATA  *B..................BNN                                                                                  *
   0000009
    0000012 DATA FLOW   00 10 04 00 C2 01 C0 00 56 02 FF 00 01 02 03 04 05 06 07 08 09 10 11 12 C2 D5 D5
            SDLC CMND   SDLC DATA RECEIVED                 RECEIVE (000)   SEND (002)    POLL/FINAL = OFF                     INFO
                        TIMESTAMP: 15.41.17.792843
            NLP 00-01   C2 01
            ANR 02-06   C0 00 56 02 FF
            THIS IS A BNN ROUTING LABEL      DEF = 0056  TPF = LOW
    0000012 USER DATA  *B..................BNN                                                                                  *
```

Figure 48. Token-ring with BNN HPR data, SNA detail sample report

VTAM buffer trace data (alternate), SNA detail sample report

ACF/TAP supports VTAM full buffer trace data, but prints a maximum of 256 bytes per record. Starting with SSP V4R8, the control parameter LONGPIU=YES can be specified, and up to 4096 bytes of VTAM full buffer trace data per PIU is printed. This could be 4096 bytes from one GTF record or 4096 bytes reassembled from multiple GTF records.

The SYSPRINT report shown in Figure 49 on page 219 displays the complete buffer trace data when DUMP=YES is specified. For more information, see the buffer contents information in z/OS Communications Server: SNA Diagnosis Vol 2, FFST Dumps and the VIT.

```
          VTAM                                   ADVANCED COMMUNICATIONS FUNCTION
                                                       TRACE ANALYSIS PROGRAM
           DATE: mm:dd:yyyy                  SYSTEMS NETWORK ARCHITECTURE DETAIL (SDPRT)                    PAGE: 00001

   2         3                                          4                                                                  5
RECORD/    GROUP                                                                                                        ENTRY
 MESSAGE  SUMMARY                              D E S C R I P T I V E  A N A L Y S I S                                  SUMMARY
0000011
 0000008 VTAM/TIME:     17.27.14.312688   ***   ORIG-ADDR: 0000000C 0001 (VTAM    )   --->   DEST-ADDR: 00000004 0030 (AV2741P )
         DATA FLOW TH  40000002 00000000 00000004 0000000C  1D00 0030 0001 005A 000C
                   RH  6B8000
                   RU  1102010500000000 70                                                  * .........                          *
         TH  00-02   FORMAT ID (FID):  4 * TG SWEP:OFF  MIG:OFF  PCI:OFF * NET PRI:OFF              IERN: 00 ERN: 00 *
         TH  03-04   VR NUMBER (VRN):  0 * VRCWI: INC  TG REORDR REQD: 0 * TP PRI:  2       TG SEQUENCE NUMBER:   000 *
         TH  04-06   VRCWRI: R VRRWI:  0 * NON-SEQENCD NON-SUPRVSRY DATA *                  VR SEQUENCE NUMBER:   000 *
         TH  06-     VR PACING: NONE     * ORIGIN: 0000000C 0001         *                 SNF SEQUENCE NUMBER:  005A *
         TH    -25   SEGMENT(MPF):ONLY   * DESTINATION: 00000004 0030    * FLOW: EXPEDITED        COUNT (DCF): 00012 *
         RH  00-02   RU TYPE: SESSION CONTROL   REQUEST  * RESPONSE/REQUEST: DR1              * CHAIN: ONLY ELEMENT   *
                     RU FORMAT:   FORMATTED              * PACING INDICATOR: OFF              *                       *
                     BRACKET:                            * CHANGE DIRECTION INDICATOR: OFF    * CODE SEL:EBCDIC       *
         RU  00-     COMMAND: ACTPU     ACTIVATE PHYSICAL UNIT CMD DATA: 02 01 05 00 00 00 00 70                        Q ACTPU
0000012
 0000009 VTAM/TIME:     17.27.14.501000   ***   ORIG-ADDR: 00000004 0030 (AV2741P )   --->   DEST-ADDR: 0000000C 0001 (VTAM    )
         DATA FLOW TH  40000302 20000065 0000000C 00000004  1D00 0001 0030 005A 000D
                   RH  EB8000
                   RU  1101404040404040 4040                                                * ..                                 *
         TH  00-02   FORMAT ID (FID):  4 * TG SWEP:OFF  MIG:OFF  PCI:OFF * NET PRI:OFF              IERN: 00 ERN: 03 *
         TH  03-04   VR NUMBER (VRN):  0 * VRCWI: INC  TG REORDR REQD: 0 * TP PRI:  2       TG SEQUENCE NUMBER:   000 *
         TH  04-06   VRCWRI: R VRRWI:  0 * SINGLY SEQUENCED DATA         *                  VR SEQUENCE NUMBER:   065 *
         TH  06-     VR PACING: NONE     * ORIGIN: 00000004 0030         *                 SNF SEQUENCE NUMBER:  005A *
         TH    -25   SEGMENT(MPF):ONLY   * DESTINATION: 0000000C 0001    * FLOW: EXPEDITED        COUNT (DCF): 00013 *
         RH  00-02   RU TYPE: SESSION CONTROL   +RESPONSE* RESPONSE/REQUEST: DR1              * CHAIN: ONLY ELEMENT   *
                     RU FORMAT:   FORMATTED              * PACING INDICATOR: OFF              *                       *
         RU  00-     COMMAND: ACTPU     ACTIVATE PHYSICAL UNIT CMD DATA: 01 40 40 40 40 40 40 40 40 40                  +S ACTPU
0000013
 0000010 VTAM/TIME:     17.27.14.782493   ***   ORIG-ADDR: 0000000C 0001 (VTAM    )   --->   DEST-ADDR: 00000004 0031 (AV2741  )
         DATA FLOW TH  40000002 00000000 00000004 0000000C  1D00 0031 0001 005B 0006
                   RH  6B8000
                   RU  0D0201                                                               * ...                                *
         TH  00-02   FORMAT ID (FID):  4 * TG SWEP:OFF  MIG:OFF  PCI:OFF * NET PRI:OFF              IERN: 00 ERN: 00 *
         TH  03-04   VR NUMBER (VRN):  0 * VRCWI: INC  TG REORDR REQD: 0 * TP PRI:  2       TG SEQUENCE NUMBER:   000 *
         TH  04-06   VRCWRI: R VRRWI:  0 * NON-SEQENCD NON-SUPRVSRY DATA *                  VR SEQUENCE NUMBER:   000 *
         TH  06-     VR PACING: NONE     * ORIGIN: 0000000C 0001         *                 SNF SEQUENCE NUMBER:  005B *
         TH    -25   SEGMENT(MPF):ONLY   * DESTINATION: 00000004 0031    * FLOW: EXPEDITED        COUNT (DCF): 00006 *
         RH  00-02   RU TYPE: SESSION CONTROL   REQUEST  * RESPONSE/REQUEST: DR1              * CHAIN: ONLY ELEMENT   *
                     RU FORMAT:   FORMATTED              * PACING INDICATOR: OFF              *                       *
                     BRACKET:                            * CHANGE DIRECTION INDICATOR: OFF    * CODE SEL:EBCDIC       *
         RU  00-     COMMAND: ACTLU     ACTIVATE LOGICAL UNIT  CMD DATA: 02 01                                          Q ACTLU
0000014
 0000011 VTAM/TIME:     17.27.15.012722   ***   ORIG-ADDR: 00000004 0031 (AV2741  )   --->   DEST-ADDR: 0000000C 0001 (VTAM    )
         DATA FLOW TH  40000302 20000066 0000000C 00000004  1D00 0001 0031 005B 0013
                   RH  EB8000
                   RU  0D0101                                                               * ...                                *
                   CV  0085000000                                                           * .e...                              *
                   CV  0C06030001000000                                                     * ........                           *
         TH  00-02   FORMAT ID (FID):  4 * TG SWEP:OFF  MIG:OFF  PCI:OFF * NET PRI:OFF              IERN: 00 ERN: 03 *
         TH  03-04   VR NUMBER (VRN):  0 * VRCWI: INC  TG REORDR REQD: 0 * TP PRI:  2       TG SEQUENCE NUMBER:   000 *
         TH  04-06   VRCWRI: R VRRWI:  0 * SINGLY SEQUENCED DATA         *                  VR SEQUENCE NUMBER:   066 *
         TH  06-     VR PACING: NONE     * ORIGIN: 00000004 0031         *                 SNF SEQUENCE NUMBER:  005B *
         TH    -25   SEGMENT(MPF):ONLY   * DESTINATION: 0000000C 0001    * FLOW: EXPEDITED        COUNT (DCF): 00019 *
         RH  00-02   RU TYPE: SESSION CONTROL   +RESPONSE* RESPONSE/REQUEST: DR1              * CHAIN: ONLY ELEMENT   *
                     RU FORMAT:   FORMATTED              * PACING INDICATOR: OFF              *                       *
         RU  00-     COMMAND: ACTLU     ACTIVATE LOGICAL UNIT  CMD DATA: 01 01 00 85 00 00 00 0C 06 03 00 01 00 00     +S ACTLU
```

Figure 49. VTAM buffer trace data (alternate), SNA detail sample report

VTAM full buffer trace data (LONGPIU=YES), SNA detail sample report

```
                                                                  1
          VTAM                                   ADVANCED COMMUNICATIONS FUNCTION
                                                       TRACE ANALYSIS PROGRAM
          DATE: mm:dd:yyyy                   SYSTEMS NETWORK ARCHITECTURE DETAIL (SDPRT)                    PAGE: 00001

    2        3                                                4                                                          5
 RECORD/    GROUP                                                                                                     ENTRY
  MESSAGE  SUMMARY                                D E S C R I P T I V E   A N A L Y S I S                              SUMMARY

0000002

 0000001 DATA FLOW   40 00 00 00 00 00 00 00 00 00 00 01 00 00 00 01 1C 00 00 FD 00 01 00 07 00 0D 8B 80 00 81 06 80 00
                      00 5B 03 03 80 00
                     TIMESTAMP: 14.59.43.045760

         TH  00-02   FORMAT ID (FID):  4 * TG SWEP:OFF  MIG:OFF  PCI:OFF * NET PRI:OFF              IERN: 00 ERN: 00 *
         TH  03-04   VR NUMBER (VRN):  0 * VRCWI: INC  TG REORDR REQD: 0 * TP PRI:  0       TG SEQUENCE NUMBER:   000 *
         TH  04-06   VRCWRI: R VRRWI:  0 * NON-SEQENCD NON-SUPRVSRY DATA *                 VR SEQUENCE NUMBER:   000 *
         TH  06-     VR PACING: NONE     * ORIGIN: 00000001 0001         *                SNF SEQUENCE NUMBER:  0007 *
         TH    -25   SEGMENT(MPF):ONLY   * DESTINATION: 00000001 00FD    * FLOW: NORMAL            COUNT (DCF): 00013 *

         RH  00-02   RU TYPE: FM DATA FLOW      +RESPONSE* RESPONSE/REQUEST: DR1             * CHAIN: ONLY ELEMENT   *
                     RU FORMAT:   FORMATTED              * PACING INDICATOR: OFF             *                       *

         RU  00-              LOGICAL SSCP SERVICES: 06 - SESSION SERVICES COMMAND: 80 - INITIATE OTHER                  INIT-OTHER

 0000001 USER DATA  *..$....                                                                                           *

0000003

 0000002 DATA FLOW   40 00 00 00 00 00 00 00 00 00 00 01 00 00 00 01 1C 00 00 FD 00 01 00 02 01 1C 0B 80 00 81 06 01 00
                     2A 00 00 00 00 00 00 3B 01 03 03 B1 A0 30 40 00 07 00 00 87 00 00 00 00 00 00 00 00 00 00 00 00 00
                     09 00 00 00 00 00 00 00 00 00 00 07 C5 C3 C8 D6 C1 F0 F1 00 0E 00 00 00 00 01 00 FD 00 00 08 00 00 00
                     01 F3 07 C5 C3 C8 D6 C1 F0 F2 00 00 08 E2 C9 D4 D3 D6 C7 D6 D5 00 0E 01 C0 6D 00 00 00 80 00 00 00
                     00 00 00 00 00 0D 44 C9 D5 E3 C5 D9 C1 C3 E3 40 40 40 40 40 40 40 40 33 00 01 18 00 00 00 01 00 02
                     01 00 01 01 01 02 02 00 02 01 02 02 03 00 03 01 03 02 04 00 04 01 04 02 05 00 05 01 05 02 06 00 06
                     01 06 02 07 00 07 01 07 02 15 14 00 00 00 01 00 C3 00 00 00 02 01 22 D5 C5 E3 C1 40 40 40 40 0E 0D
                     F3 D5 C5 E3 C1 4B C5 C3 C8 D6 C1 F0 F1 0E 0D F3 D5 C5 E3 C1 4B C5 C3 C8 D6 C1 F0 F2 2C 0A 01 08 40
                     40 40 40 40 40 40 40 2D 09 08 C9 D5 E3 C5 D9 C1 C3  E3 60 12 E7 F3 89 56 9E 10 46 3D 09 D5 C5 E3 C1
                     4B C1 F0 F1 D5 2F 03 03 80 40 3F 01 80

                     TIMESTAMP: 14.59.43.046607
         TH  00-02   FORMAT ID (FID):  4 * TG SWEP:OFF  MIG:OFF  PCI:OFF * NET PRI:OFF              IERN: 00 ERN: 00 *
         TH  03-04   VR NUMBER (VRN):  0 * VRCWI: INC  TG REORDR REQD: 0 * TP PRI:  0       TG SEQUENCE NUMBER:   000 *
         TH  04-06   VRCWRI: R VRRWI:  0 * NON-SEQENCD NON-SUPRVSRY DATA *                 VR SEQUENCE NUMBER:   000 *
         TH  06-     VR PACING: NONE     * ORIGIN: 00000001 0001         *                SNF SEQUENCE NUMBER:  0002 *
         TH    -25   SEGMENT(MPF):ONLY   * DESTINATION: 00000001 00FD    * FLOW: NORMAL            COUNT (DCF): 00284 *

         RH  00-02   RU TYPE: FM DATA FLOW      REQUEST  * RESPONSE/REQUEST: DR1             * CHAIN: ONLY ELEMENT   *
                     RU FORMAT:   FORMATTED              * PACING INDICATOR: OFF             *                       *
                     BRACKET:                            * CHANGE DIRECTION INDICATOR: OFF   * CODE SEL:EBCDIC       *

         RU  00-              LOGICAL SSCP SERVICES: 06 - SESSION SERVICES COMMAND: 01 - CONTROL INITIATE                CINIT

 0000002 USER DATA  *............... ....g.......................................................................*
                    *...........................................................................................*
                    *.......................................................................                   *
```

Figure 50. VTAM full buffer trace data (LONGPIU=YES), SNA detail sample report

SNA summary reports

The selection parameter is SSPRT.

This topic contains SNA summary reports. See the following figures:

- Figure 44 on page 216
- Figure 52 on page 227
- Figure 53 on page 228
- Figure 46 on page 217
- Figure 55 on page 229
- Figure 56 on page 229
- Figure 57 on page 230
- Figure 58 on page 230

ACF/TAP formats the report in a compact one-line-per-message format but still contains the essential SNA and SDLC protocol information. The information about this report is presented in a vertical format so changes in a bit setting, from transmission to transmission can be easily detected.

The report title lines identify the definition of each column; single characters or blanks identify the setting of each field.

Table 36 on page 221 describes the column headers and the trace data contained in this report type. To locate this information about the sample reports, reference the numbers (n) listed in this table to the corresponding numbers (n) shown in the sample reports.

Table 36. SNA summary report description

Reference number (n)	Report column headers and the trace data
1	The page heading contains the report name, report parameter, and the date the report was printed or displayed.
2	**MESSAGE NUMBER** The ACF/TAP-assigned number for this message.
3	**TYPE** This field indicates the trace type: **B** Buffer or PIU **G** GPT **L** Line **N** NTO trace **T** TG trace
4	**DIRECTION** Direction pertains to the host for buffer trace and to NCP for line trace. **I** Inbound **O** Outbound

Table 36. SNA summary report description (continued)	
Reference number (n)	**Report column headers and the trace data**
5	**SDLC ADDRESS** (TIME/SDLC: Alternate (ALT) report) **TIME (Alternate report only)** Timestamp for the entry. **SDLC ADDRESS** The A field of the SDLC F-A-C-BCC-F frame. **CMND/RESP** SDLC frame type. **C** Command **R** Response **POLL/FINAL** Setting of SDLC poll/final bit in the SDLC "C" (command) field. **S** Bit is set. **Blank** Bit is not set. **RECEIVE** The receive count in decimal from the SDLC "C" field for information and supervisory frames **SEND** Send count in decimal from the SDLC "C" field for information and supervisory frames. **TYPE CMD** SDLC command type. **I** Information frame. **S** Supervisory frame. **N** Nonsequenced frame.

Table 36. SNA summary report description (continued)	
Reference number (n)	**Report column headers and the trace data**
6	**TRANSMISSION HEADER** This header includes the following fields: **FORMAT IDENTIFIER (FID)** Transmission header type. **0** FIDO **1** FID1 **2** FID2 **3** FID3 **4** FID4 **C** NLP (HPR) **F/M/L/ (=ENTIRE) SEGMENT** Mapping indicator. **F** First segment **M** Middle segment **L** Last segment **Blank** Entire segment **EXPEDITED** **E** Expedited **Blank** Not expedited **NETWORK NAMES (Alternate report only)** This is the network name associated with the network address. **NETWORK ADDRESSES** • 2-byte (FID0 and FID1) network addresses • 1-byte (FID2) network addresses (or 17-bit FID2 LFSID) • 4-byte subarea fields and the 2-byte element addresses (FID4) in the TH. The origin address always precedes the destination address (FID2).

Table 36. SNA summary report description (continued)	
Reference number (n)	**Report column headers and the trace data**
6 (Continued)	**SEQNO** Transmission header sequence number in hexadecimal. **COUNT** Transmission header data count field converted to decimal. **FROM/TO PU (FID3)** Local session identifier. **FID3 LSID** SSCP/LU identifier. **S** SSCP **Blank** Logical unit **FROM/TO SSCP (FID0):** PU/LU indicator **P** Physical unit **Blank** Logical unit

Table 36. SNA summary report description (continued)	
Reference number (n)	**Report column headers and the trace data**
7	**REQUEST HEADER** This header includes the following fields: **REQUEST(Q)/RESPONSE(S)** Setting of request or response indicator in the request header of a data entry. This can be one of the following values: **Q** Request **S** Response **+** Positive response **-** Negative response **SC/DFC/NC/ (=FMDATA) RU** Request or response unit category. This can be one of the following values: **S** Session control **D** Data flow control **N** Network control **Blank** FM data **FORMATTED** Format indicator. This can be one of the following values: **F** Formatted. **Blank** Unformatted **F/M/L(=ONLY) CHAIN** Chaining control. It can have one of the following values: **F** First request or response unit in chain. **M** Middle request or response unit in chain. **L** Last request or response unit in chain. **Blank** Only request or response unit in chain.

Table 36. SNA summary report description (continued)	
Reference number (n)	**Report column headers and the trace data**
7 (Continued)	**REQUEST/RESPONSES** Response bits settings. It can have one of the following values: **DR1** FME bit is set. **DR2** RN bit is set. **EXCEPTION** Exception bit is set. **Blank** No bits are set. **PACING INDICATOR** **P** Bit is set. **Blank** Bit is not set.
7 (Continued)	**BEGIN BRACKET INDICATOR** **B** Bit is set. **Blank** Bit is not set. **END BRACKET INDICATOR** **E** Bit is set. **C** Conditional end bracket is set. **Blank** Neither bit is set. **CHANGE DIRECTION IND (Indicator):** **S** bit is not set. **Blank** Bit is not set. **ALT CODE** Code selection indicator. It can have the following values: **A** Bit is set. **Blank** Bit is not set. **COMMAND** The abbreviation of the network control, session control, or data flow control command or response, or the abbreviation of the FM data of an SSCP network services command or response, or the BTU command of a BSC device. **SENSE** The 4 bytes of sense data if the sense data bit is set in the request header.

Frame-relay data, SNA summary sample report

ACF/TAP treats frame-relay switching equipment (FRSE) data as non-SNA; therefore, FRSE data does not appear on the report shown in Figure 51 on page 227.

```
          VTAM                                ADVANCED COMMUNICATIONS FUNCTION
                                                   TRACE ANALYSIS PROGRAM
          DATE: mm:dd:yyyy                 SYSTEMS NETWORK ARCHITECTURE SUMMARY (SSPRT)                PAGE: 00001
                             5                                 6                                        7
            *********SDLC********** **********TRANSMISSION HEADER*********  *********************REQUEST HEADER********************
            ....-SDLC ADDRESS       .-FORMAT IDENTIFIER (FID)               .-REQUEST(Q) / RESPONSE(S) .-PACING INDICATOR
   4        |||| .-CMND/RESP        | .-F/M/L/( =ENTIRE)SEGMENT  **FID3**   | .-SC/DFC/NC/( =FMDATA)RU | .-BEGIN BRACKET INDICATOR
DIRECTION-. |||| | .-POLL/FINAL     | | .-EXPEDITED                         | | .-FORMATTED            | | .-END BRACKET INDICATOR
   3      | |||| | | .-RECEIVE      | | |                LSID---.   | | | .-F/M/L( =ONLY)CHAIN | | | .-CHANGE DIRECTION IND
  TYPE--. | |||| | | |   .-SEND     | | |                FROM/TO SSCP--. |   | | | |                     | | | | .-ALT CODE
 2      | | |||| | | |   |   .-TYPE | | |    NETWORK    FROM/TO PU--. | |   | | | |                     | | | | | *********RU********
MESSAGE | | |||| | | |   |   | CMND | | |   ADDRESSES   SEQNO COUNT | | |   | | | | REQUEST/RESPONSES  | | | | |  COMMAND    SENSE
NUMBER  V V VVVV V V V   V   V ____ V V V _____________ _____ _____ V V V   V V V V _________________  V V V V V __________ ________
0000032 L O 00D7 C S         U XID
0000033 L O 00D7 C S         U XID
0000034 L O 00D7 C S         U XID
0000035 L O 00D7 C S         U XID
0000036 L O 00D7 C S         U XID
0000037 L O 00D7 C S         U XID
0000038 L O 00D7 C S         U UA
0000041 L O 00D7 C   000 000 I      4   E 00000014 0000 0000  00030         Q N F                                ER OP
                                         00000015 0000
0000044 L I 00D7 R S         U XID
0000046 L I 00D7 R S         U XID
0000047 L I 00D7 R S         U XID
0000049 L I 00D7 R S         U SABE
0000054 L I 00D7 R   000 000 I      4   E 00000015 0000 0000  00030         Q N F                                ER OP
                                         00000014 0000
```

Figure 51. Frame-relay data, SNA summary sample report

Frame-relay with BNN HPR data, SNA summary sample report

```
          VTAM                                ADVANCED COMMUNICATIONS FUNCTION
                                                   TRACE ANALYSIS PROGRAM
          DATE: mm:dd:yyyy                 SYSTEMS NETWORK ARCHITECTURE SUMMARY (SSPRT)                PAGE: 00001
                             5                                 6                                        7
            *********SDLC********** **********TRANSMISSION HEADER*********  *********************REQUEST HEADER********************
            ....-SDLC ADDRESS       .-FORMAT IDENTIFIER (FID)               .-REQUEST(Q) / RESPONSE(S) .-PACING INDICATOR
   4        |||| .-CMND/RESP        | .-F/M/L/( =ENTIRE)SEGMENT  **FID3**   | .-SC/DFC/NC/( =FMDATA)RU | .-BEGIN BRACKET INDICATOR
DIRECTION-. |||| | .-POLL/FINAL     | | .-EXPEDITED                         | | .-FORMATTED            | | .-END BRACKET INDICATOR
   3      | |||| | | .-RECEIVE      | | |                LSID---.   | | | .-F/M/L( =ONLY)CHAIN | | | .-CHANGE DIRECTION IND
  TYPE--. | |||| | | |   .-SEND     | | |                FROM/TO SSCP--. |   | | | |                     | | | | .-ALT CODE
 2      | | |||| | | |   |   .-TYPE | | |    NETWORK    FROM/TO PU--. | |   | | | |                     | | | | | *********RU********
MESSAGE | | |||| | | |   |   | CMND | | |   ADDRESSES   SEQNO COUNT | | |   | | | | REQUEST/RESPONSES  | | | | |  COMMAND    SENSE
NUMBER  V V VVVV V V V   V   V ____ V V V _____________ _____ _____ V V V   V V V V _________________  V V V V V __________ ________
0000244 L O 0020               NLP  C
0000245 L O 0020               NLP  C
0000246 L O 0020               NLP  C
0000248 L I 0020 C   020 111 I      2   E 0 00 00       0000                Q N F                                RT SETUP   REPLY
0000262 L O 0020               NLP  C
0000263 L O 0030 C S         U NLP  C
0000264 L O 0020               NLP  C
0000265 L O 0020               NLP  C
0000266 L O 0020               NLP  C
0000267 L O 0030 C S         U NLP  C
0000284 L O 0020 C   112 020 I      2   E 0 00 00       0000                Q N F                                RT SETUP   REQUEST
0000286 L O 0020               NLP  C
0000287 L O 0020               NLP  C
0000288 L O 0020               NLP  C
0000289 L O 0020               NLP  C
0000291 L I 0020 C   021 112 I      2   E 0 00 00       0000                Q N F                                RT SETUP   REPLY
0000306 L O 0020               NLP  C
   *    *    *    *    *    *    END OF REPORT     *    *    *    *    *    *    *
```

Figure 52. Frame-relay with BNN HPR data, SNA summary sample report

NCP line trace data, SNA summary sample report

```
          VTAM                                   ADVANCED COMMUNICATIONS FUNCTION
                                                      TRACE ANALYSIS PROGRAM
          DATE: mm:dd:yyyy                  SYSTEMS NETWORK ARCHITECTURE SUMMARY (SSPRT)                PAGE: 00001
                    5                                  6                                                  7
            *********SDLC********** **********TRANSMISSION HEADER*********  *********************REQUEST HEADER********************
            ....-SDLC ADDRESS       .-FORMAT IDENTIFIER (FID)               .-REQUEST(Q) / RESPONSE(S) .-PACING INDICATOR
   4        |||| .-CMND/RESP        | .-F/M/L/( =ENTIRE)SEGMENT  **FID3**   | .-SC/DFC/NC/( =FMDATA)RU | .-BEGIN BRACKET INDICATOR
DIRECTION-. |||| | .-POLL/FINAL     | | .-EXPEDITED                         | | .-FORMATTED            | | .-END BRACKET INDICATOR
   3      | |||| | | .-RECEIVE      | | |                     LSID---.    | | | .-F/M/L( =ONLY)CHAIN | | | .-CHANGE DIRECTION IND
  TYPE--. | |||| | | |   .-SEND     | | |                FROM/TO SSCP--. |    | | | |                      | | | | .-ALT CODE
 2      | | |||| | | |   |   .-TYPE | | |    NETWORK    FROM/TO PU--. | |    | | | |                      | | | | | *********RU********
MESSAGE | | |||| | | |   |   | CMND | | |   ADDRESSES   SEQNO COUNT | | |    | | | | REQUEST/RESPONSES  | | | | |  COMMAND    SENSE
NUMBER  V V VVVV V V V   V   V ____ V V V _____________ _____ _____ V V V    V V V V _________________  V V V V V _________ --------
0000001 L O 29       001 003 I      4     00000010 0001 0002  00066         Q   F   DR1                          CDINIT
                                           00000002 0001
0000002 L O 29       002 004 I      4     00000010 0001 0003  00066         Q   F   DR1                          CDINIT
                                           00000002 0001
0000003 L I 29       003 001 I      4   E 00000002 0000 0000  00000                                              VRPRS
                                           00000010 0000
0000004 L O 29       002 006 I      4     00000010 0001 0005  00066         Q   F   DR1                          CDINIT
                                           00000002 0001
0000005 L O 29       002 007 I      4     00000010 0001 0006  00066         Q   F   DR1                          CDINIT
                                           00000002 0001
0000006 L I 29       001 002 I      4   E 00000002 0000 0000  00000                                              VRPRS
                                           00000010 0000
0000007 L I 29       001 003 I      4     00000002 0001 0002  00028        +S   F   DR1                          CDINIT
                                           00000010 0001
0000008 L I 29       001 004 I      4     00000002 0001 0002  00067         Q   F   DR1                          CDCINIT
                                           00000010 0001
0000009 L I 29       001 005 I      4     00000002 0001 0003  00028        +S   F   DR1                          CDINIT
                                           00000010 0001
0000010 L I 29       001 006 I      4     00000002 0001 0003  00067         Q   F   DR1                          CDCINIT
                                           00000010 0001
0000011 L I 29       002 007 I      4   E 00000010 0000 0000  00000                                              VRPRS
                                           00000002 0000
0000012 L O 29       000 002 I      4     00000002 0001 0004  00028        +S   F   DR1                          CDINIT
                                           00000010 0001
0000013 L I 29       002 000 I      4     00000002 0001 0004  00067         Q   F   DR1                          CDCINIT
                                           00000010 0001
0000014 L I 29       003 001 I      4     00000002 0001 0005  00028        +S   F   DR1                          CDINIT
                                           00000010 0001
0000015 L I 29       004 002 I      4   E 00000010 0000 0000  00000                                              VRPRS
                                           00000002 0000
0000016 L O 29       001 003 I      4     00000010 0001 0002  00006        +S   F   DR1                          CDCINIT
                                           00000002 0001
0000017 L O 29       002 004 I      4     00000002 0001 0005  00067         Q   F   DR1                          CDCINIT
                                           00000010 0001
0000018 L I 29       004 003 I      4     00000002 0001 0006  00028        +S   F   DR1                          CDINIT
                                           00000010 0001
0000019 L I 29       005 004 I      4     00000002 0001 0006  00067         Q   F   DR1                          CDCINIT
                                           00000010 0001
0000020 L I 29       006 005 I      4     00000010 0001 0003  00006        +S   F   DR1                          CDCINIT
                                           00000002 0001
0000021 L O 29       003 005 I      4     00000010 0001 0004  00006        +S   F   DR1                          CDCINIT
                                           00000002 0001
```

Figure 53. NCP line trace data, SNA summary sample report

NTO data sample report

```
          VTAM                                   ADVANCED COMMUNICATIONS FUNCTION
                                                      TRACE ANALYSIS PROGRAM
          DATE: mm:dd:yyyy                  SYSTEMS NETWORK ARCHITECTURE SUMMARY (SSPRT)                PAGE: 00001
                    5                                  6                                                  7
            *********SDLC********** **********TRANSMISSION HEADER*********  *********************REQUEST HEADER********************
            ....-SDLC ADDRESS       .-FORMAT IDENTIFIER (FID)               .-REQUEST(Q) / RESPONSE(S) .-PACING INDICATOR
   4        |||| .-CMND/RESP        | .-F/M/L/( =ENTIRE)SEGMENT  **FID3**   | .-SC/DFC/NC/( =FMDATA)RU | .-BEGIN BRACKET INDICATOR
DIRECTION-. |||| | .-POLL/FINAL     | | .-EXPEDITED                         | | .-FORMATTED            | | .-END BRACKET INDICATOR
   3      | |||| | | .-RECEIVE      | | |                     LSID---.    | | | .-F/M/L( =ONLY)CHAIN | | | .-CHANGE DIRECTION IND
  TYPE--. | |||| | | |   .-SEND     | | |                FROM/TO SSCP--. |    | | | |                      | | | | .-ALT CODE
 2      | | |||| | | |   |   .-TYPE | | |    NETWORK    FROM/TO PU--. | |    | | | |                      | | | | | *********RU********
MESSAGE | | |||| | | |   |   | CMND | | |   ADDRESSES   SEQNO COUNT | | |    | | | | REQUEST/RESPONSES  | | | | |  COMMAND    SENSE
NUMBER  V V VVVV V V V   V   V ____ V V V _____________ _____ _____ V V V    V V V V _________________  V V V V V _________ --------
0000003 N I                        0      0012  0006   2984  00010         Q       DR1                          RST COND
0000005 N I                        0      0006  0012   2983  00010        -S   F   DR1     EXCEPTION            INV DISC
0000007 N I                        0      0006  0012   2984  00010        +S   F   DR1                          RST COND
0000008 N I                        0      0012  0006   2985  00054         Q       DR1                          WR/C DIS
0000010 N I                        0      0006  0012   2985  00010        +S   F   DR1                          WR/C DIS
0000014 N I                        0      0012  0006   2987  00010         Q       DR1                          RST COND
0000016 N I                        0      0006  0012   2986  00010        -S   F   DR1     EXCEPTION            INV DISC
0000018 N I                        0      0006  0012   2987  00010        +S   F   DR1                          RST COND
0000019 N I                        0      0012  0006   2988  00054         Q       DR1                          WR/C DIS
```

Figure 54. NTO data sample report

SDLC with BNN HPR data sample report

```
                                                                1
          VTAM                                ADVANCED COMMUNICATIONS FUNCTION
                                                        TRACE ANALYSIS PROGRAM
          DATE: mm:dd:yyyy                 SYSTEMS NETWORK ARCHITECTURE SUMMARY (SSPRT)                PAGE: 00001
                    5                                 6                                                 7
            *********SDLC********** **********TRANSMISSION HEADER*********  *********************REQUEST HEADER********************
            ....-SDLC ADDRESS       .-FORMAT IDENTIFIER (FID)              .-REQUEST(Q) / RESPONSE(S) .-PACING INDICATOR
   4        |||| .-CMND/RESP        | .-F/M/L/( =ENTIRE)SEGMENT  **FID3**   | .-SC/DFC/NC/( =FMDATA)RU | .-BEGIN BRACKET INDICATOR
DIRECTION-. |||| | .-POLL/FINAL     | | .-EXPEDITED                         | | .-FORMATTED           | | .-END BRACKET INDICATOR
   3      | |||| | | .-RECEIVE      | | |                       LSID---.   | | | .-F/M/L( =ONLY)CHAIN | | | .-CHANGE DIRECTION IND
  TYPE--. | |||| | | |   .-SEND     | | |               FROM/TO SSCP--. |   | | | |                     | | | | .-ALT CODE
 2      | | |||| | | |   |   .-TYPE | | |    NETWORK    FROM/TO PU--. | |   | | | |                     | | | | | *********RU********
MESSAGE | | |||| | | |   |   | CMND | | |   ADDRESSES   SEQNO COUNT | | |   | | | | REQUEST/RESPONSES  | | | | |  COMMAND    SENSE
NUMBER  V V VVVV V V V   V   V ____ V V V _____________ ___________ V V V   V V V V _________________  V V V V V _________ ________
         0000006 RR  0000000 RNR                ELEMENTS SUPPRESSED
0000007 L I C1   R   001 001 I
0000008 L I C1   R   001 001 I      2     0 01 01       0001                Q       DR1                  B E S
         0000008 RR  0000000 RNR                ELEMENTS SUPPRESSED
0000017 L I C1   R   002 002 I
0000018 L I C1   R   002 002 I NLP  C
         0000007 RR  0000000 RNR                ELEMENTS SUPPRESSED
0000026 L I C1   R   002 003 I
0000027 L I C1   R   002 003 I NLP  C
         0000014 RR  0000000 RNR                ELEMENTS SUPPRESSED
0000042 L O C1   C   002 001 I      2     0 01 01       0001               -S       DR1     EXCEPTION                        80050000
         0000019 RR  0000000 RNR                ELEMENTS SUPPRESSED
0000062 L O C1   C   004 002 I      2     1 01 01       0001                Q       DR1                  B E S
         0000006 RR  0000000 RNR                ELEMENTS SUPPRESSED
0000069 L O C1   C   004 003 I NLP  C
         0000021 RR  0000000 RNR                ELEMENTS SUPPRESSED
0000091 L I C1   R   002 001 I
```

Figure 55. SDLC with BNN HPR data sample report

TG trace data, SNA summary sample report

```
                                                                1
          VTAM                                ADVANCED COMMUNICATIONS FUNCTION
                                                        TRACE ANALYSIS PROGRAM
          DATE: mm:dd:yyyy                 SYSTEMS NETWORK ARCHITECTURE SUMMARY (SSPRT)                PAGE: 00001
                    5                                 6                                                 7
            *********SDLC********** **********TRANSMISSION HEADER*********  *********************REQUEST HEADER********************
            ....-SDLC ADDRESS       .-FORMAT IDENTIFIER (FID)              .-REQUEST(Q) / RESPONSE(S) .-PACING INDICATOR
   4        |||| .-CMND/RESP        | .-F/M/L/( =ENTIRE)SEGMENT  **FID3**   | .-SC/DFC/NC/( =FMDATA)RU | .-BEGIN BRACKET INDICATOR
DIRECTION-. |||| | .-POLL/FINAL     | | .-EXPEDITED                         | | .-FORMATTED           | | .-END BRACKET INDICATOR
   3      | |||| | | .-RECEIVE      | | |                       LSID---.   | | | .-F/M/L( =ONLY)CHAIN | | | .-CHANGE DIRECTION IND
  TYPE--. | |||| | | |   .-SEND     | | |               FROM/TO SSCP--. |   | | | |                     | | | | .-ALT CODE
 2      | | |||| | | |   |   .-TYPE | | |    NETWORK    FROM/TO PU--. | |   | | | |                     | | | | | *********RU********
MESSAGE | | |||| | | |   |   | CMND | | |   ADDRESSES   SEQNO COUNT | | |   | | | | REQUEST/RESPONSES  | | | | |  COMMAND    SENSE
NUMBER  V V VVVV V V V   V   V ____ V V V _____________ _____ _____ V V V   V V V V _________________  V V V V V _________ ________
0000012 T O                         4     0000002D 0001 000A  00037         Q   F   DR1                          CDSESSST
                                          00000001 0001
0000013 T O                         4   E 0000002D 0076 0034  00004         Q S F   DR1                          SDT
                                          00000001 0030
0000014 T I                         4     00000001 0030 0003  00003        +S       DR1
                                          00000007 0079
0000015 T O                         4   E 00000007 0000 0000  00000                                              VRPRS
                                          00000001 0000
0000016 T O                         4   E 0000002D 0077 0033  00004         Q S F   DR1                          SDT
                                          00000001 0030
0000017 T I                         4     00000001 0030 0003  00070         Q       DR1                  B E
                                          00000007 0079
0000018 T O                         4     0000002D 0001 000B  00037         Q   F   DR1                          CDSESSST
                                          00000001 0001
0000019 T O                         4   E 0000002D 0078 0032  00004         Q S F   DR1                          SDT
                                          00000001 0030
0000020 T I                         4     00000001 0030 0004  00003        +S       DR1
                                          00000007 0049
0000021 T I                         4     00000001 0030 0004  00070         Q       DR1                  B E
                                          00000007 0049
0000022 T I                         4   E 00000001 0062 002F  00039         Q S F   DR1                          BIND
                                          00000007 004A        PLU(CECHO01          ) SLU(                ) PCID(               )
0000023 T I                         4   E 00000001 0000 0000  00000                                              VRPRS
                                          00000007 0000
0000024 T O                         4     00000007 0079 0003  00003        +S       DR1
                                          00000001 0030
0000025 T O                         4     00000007 0079 0004  00070         Q       DR1                  B E
                                          00000001 0030
0000026 T O                         4     00000007 0049 0004  00003        +S       DR1
                                          00000001 0030
0000027 T O                         4     00000007 0049 0005  00070         Q       DR1                  B E
                                          00000001 0030
0000028 T O                         4   E 00000007 004A 002F  00005        +S S F   DR1                          BIND
                                          00000001 0062
```

Figure 56. TG trace data, SNA summary sample report

Token-ring with BNN HPR data, SNA summary sample report

```
            VTAM                                ADVANCED COMMUNICATIONS FUNCTION
                                                      TRACE ANALYSIS PROGRAM
            DATE: mm:dd:yyyy                 SYSTEMS NETWORK ARCHITECTURE SUMMARY (SSPRT)                PAGE: 00001
                          5                                 6                                          7
              *********SDLC********** **********TRANSMISSION HEADER*********  *********************REQUEST HEADER********************
              ....-SDLC ADDRESS       .-FORMAT IDENTIFIER (FID)               .-REQUEST(Q) / RESPONSE(S) .-PACING INDICATOR
   4          |||| .-CMND/RESP        | .-F/M/L/( =ENTIRE)SEGMENT  **FID3**   | .-SC/DFC/NC/( =FMDATA)RU | .-BEGIN BRACKET INDICATOR
DIRECTION-. |||| | .-POLL/FINAL      | | .-EXPEDITED                         | | .-FORMATTED           | | .-END BRACKET INDICATOR
   3      | |||| | | .-RECEIVE       | | |                   LSID---.   | | | .-F/M/L( =ONLY)CHAIN | | | .-CHANGE DIRECTION IND
  TYPE--. | |||| | | |   .-SEND      | | |              FROM/TO SSCP--. |   | | | |                      | | | | .-ALT CODE
 2      | | |||| | | |   |   .-TYPE | | |    NETWORK    FROM/TO PU--. | |   | | | |                      | | | | | *********RU********
MESSAGE | | |||| | | |   |   | CMND | | |   ADDRESSES   SEQNO COUNT | | |   | | | | REQUEST/RESPONSES  | | | | |  COMMAND    SENSE
NUMBER  V V VVVV V V V   V   V ____ V V V _____________ _____ _____ V V V   V V V V _________________  V V V V V _________ ________
0000001 B O                        4     00000001 0001 001C  00011        Q   F   DR1                          ACTTRACE
                                         00000015 0000
0000002 B I                        4     00000015 0000 001C  00006       +S   F   DR1                          ACTTRACE
                                         00000001 0001
0000003 B O                        4     00000001 0001 001D  00011        Q   F   DR1                          DACTTRCE
                                         00000015 0000
0000004 B I                        4     00000015 0000 001D  00006       +S   F   DR1                          DACTTRCE
                                         00000001 0001
0000005 L I                  U NLP  C
0000006 L I                  I NLP  C
0000007 L O                  U NLP  C
0000008 L O                  U NLP  C
0000009 L I                  U NLP  C
0000010 L I                  U NLP  C
0000011 L O                  U NLP  C
0000012 L O                  U NLP  C
0000013 L I                  I NLP  C
0000014 L I                  I NLP  C
```

Figure 57. Token-ring with BNN HPR data, SNA summary sample report

VTAM buffer data (alternate), SNA summary sample report

```
                                                                  1
            VTAM                                ADVANCED COMMUNICATIONS FUNCTION
                                                      TRACE ANALYSIS PROGRAM
            DATE: mm:dd:yyyy                 SYSTEMS NETWORK ARCHITECTURE SUMMARY (SSPRT)                PAGE: 00001
                          5                                 6                                          7
              ******TIME/SDLC******** **********TRANSMISSION HEADER**********  *********************REQUEST HEADER********************
              ....-SDLC ADDRESS       .-FORMAT IDENTIFIER (FID)               .-REQUEST(Q)/RESPONSE(S)  .-PACING INDICATOR
   4          |||| .-CMND/RESP        | .-F/M/L/( =ENTIRE)SEGMENT    **FID3**  | .-SC/DFC/NC( =FMDATA)RU | .-BEGIN BRACKET INDICATOR
DIRECTION-. |||| | .-POLL/FINAL      | | .-EXPEDITED                         | | .-FORMATTED           | | .-END BRACKET INDICATOR
   3      | |||| | | .-RECEIVE       | | | .-NETWORK NAMES------.    LSID-.   | | | .-F/M/L( =ONLY)      | | | .-CHANGE DIRECTION IND
  TYPE--. | |||| | | |   .-SEND      | | | .--ADDRESSES--. FROM/TO SSCP-. |   | | | |     IN CHAIN      | | | | .-ALT CODE
 2 ---- | | |||| | | |   |   .-TYPE | | | | (O=ORIG)      FROM/TO PU-. | |   | | | |                      | | | | | *********RU********
MESSAGE | | |||| | | |   |   | CMND | | | | (D=DEST)      SEQ# COUNT | | |   | | | | REQUEST/RESPONSES | | | | |  COMMAND    SENSE
NUMBER  V V VVVV V V V   V   V ____ V V V V_______________ _____ _____ V V V   V V V V _________________ V V V V V _________ ________
              ******TIME/SDLC******** **********TRANSMISSION HEADER**********  *********************REQUEST HEADER********************
0000001 B O VTAM/TIME(17.27.13.108080)    VTAM         NA04N
                                   4     O-0000000C 0001 0025 00008        Q   F   DR1                          ACTLINK
                                         D-00000004 0000
0000002 B I VTAM/TIME(17.27.13.306205)    NA04N        VTAM
                                   4     O-00000004 0000 0025 00006       +S   F   DR1                          ACTLINK
                                         D-0000000C 0001
0000003 B I VTAM/TIME(17.27.13.315352)    NA04N        VTAM
                                   4     O-00000004 0000 000C 00366        Q   F   DR1                          RECTRD
                                         D-0000000C 0001
0000004 B O VTAM/TIME(17.27.13.680193)    VTAM         NA04N
                                   4     O-0000000C 0001 0026 00008        Q   F   DR1                          CONTACT
                                         D-00000004 0000
0000005 B I VTAM/TIME(17.27.13.861765)    NA04N        VTAM
                                   4     O-00000004 0000 0026 00006       +S   F   DR1                          CONTACT
                                         D-0000000C 0001
0000006 B I VTAM/TIME(17.27.13.862927)    NA04N        VTAM
                                   4     O-00000004 0000 000D 00009        Q   F   DR1 DR2 EXCEPTION            CONTACTD
                                         D-0000000C 0001
0000007 B O VTAM/TIME(17.27.14.047721)    VTAM         NA04N
                                   4     O-0000000C 0001 000C 00006       +S   F   DR1                          RECTRD
                                         D-00000004 0000
0000008 B O VTAM/TIME(17.27.14.312688)    VTAM         AV2741P
                                   4   E O-0000000C 0001 005A 00012        Q S F   DR1                          ACTPU
                                         D-00000004 0030
0000009 B I VTAM/TIME(17.27.14.501000)    AV2741P      VTAM
                                   4   E O-00000004 0030 005A 00013       +S S F   DR1                          ACTPU
                                         D-0000000C 0001
0000010 B O VTAM/TIME(17.27.14.782493)    VTAM         AV2741
                                   4   E O-0000000C 0001 005B 00006        Q S F   DR1                          ACTLU
                                         D-00000004 0031
0000011 B I VTAM/TIME(17.27.15.012722)    AV2741       VTAM
                                   4   E O-00000004 0031 005B 00019       +S S F   DR1                          ACTLU
                                         D-0000000C 0001
0000012 B O VTAM/TIME(17.27.15.168145)    VTAM         AV2741
                                   4     O-0000000C 0001 0001 00027        Q       DR1
                                         D-00000004 0031
0000013 B I VTAM/TIME(17.27.23.619675)    AV2741       VTAM
                                   4     O-00000004 0031 0001 00003       +S       DR1
                                         D-0000000C 0001
0000014 B I VTAM/TIME(17.27.59.195472)    AV2741       VTAM
                                   4     O-00000004 0031 0001 00023        Q       DR1 DR2
                                         D-0000000C 0001
0000015 B I VTAM/TIME(17.28.01.226988)    NA04N        VTAM
                                   4     O-00000004 0000 000E 00014        Q   F M DR1 DR2 EXCEPTION            REQCONT
                                         D-0000000C 0001
0000016 B O VTAM/TIME(17.28.02.126397)    VTAM         AV2741
                                   4     O-0000000C 0001 0001 00003       +S       DR1 DR2
                                         D-00000004 0031
```

Figure 58. VTAM buffer data (alternate), SNA summary sample report

ACF/TAP supports VTAM full buffer trace data, but prints a maximum of 256 bytes per record. Starting with SSP V4R8, the control parameter LONGPIU=YES can be specified, and up to and including 4096 bytes of VTAM full buffer trace data per PIU are printed. This could be 4096 bytes from one GTF record or 4096 bytes reassembled from multiple GTF records.

The SYSPRINT report displays the complete buffer trace data when DUMP=YES is specified. For more information about the buffer contents trace, see z/OS Communications Server: SNA Diagnosis Vol 2, FFST Dumps and the VIT.

SYSPRINT reports

The SYSPRINT reports contain the following information:

- A summary of the ACF/TAP control parameters used in processing the trace file
- Operational and status messages
- Network error messages (from the network error report)

The SYSPRINT reports can optionally contain the following information:

- TIC trace data (when INPUT=LINE and TIC trace data is present)
- 3710 trace data (when INPUT=NETCTLR and 3710 trace data is present)
- A summary of each trace record on a trace file, even if ACF/TAP did not process the trace record
- A summary of records specified by:
  - INPUT=*type*
  - START=*count*
  - END=*count*
  - STIME=*hh.mm.ss*
  - ETIME=*hh.mm.ss*
  - SDATE=*mmddyyyy*
  - EDATE=*mmddyyyy*
  - NODE=*nodename*
- PIU summary (PRINT=YES)
- A hexadecimal dump of each trace record.

Table 37 on page 231 shows the result of specifying a particular SUMMARY value.

Table 37. SUMMARY values and results

SUMMARY value	Result
EVERY	ACF/TAP summarizes every trace record in the trace file, even if it is a type that ACF/TAP does not process.
ALL	ACF/TAP summarizes all of the trace records of INPUT=type.
YES	ACF/TAP summarizes all records that it processes.

When records are selectively processed by time, date, count, or nodename, SUMMARY=ALL might produce more summary records than SUMMARY=YES. This is illustrated in Figure 59 on page 232.

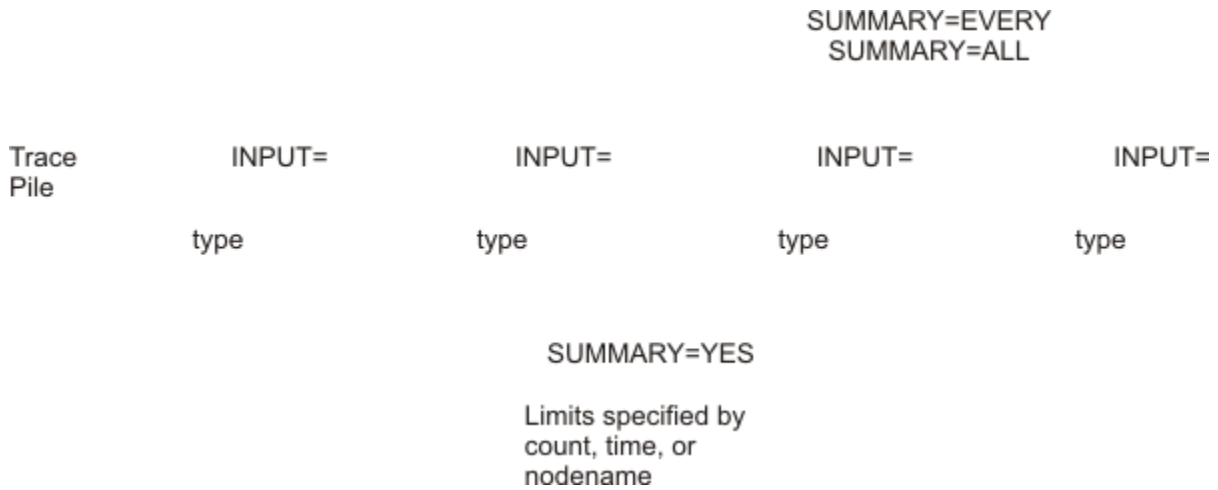

Figure 59. SUMMARY parameter illustration

Depending on the input source, the format of the summary record of each trace record is different. In all cases, ACF/TAP includes the timestamp, if present, in the trace record. ACF/TAP also includes other helpful source-dependent information, such as GTF, resource identifier (RID), format identifier (FID), and element identifier (EID).

ACF/TAP includes two sequence numbers in the trace file summary. One number is the ACF/TAP-assigned absolute sequence number, and the other number is the ACF/TAP-assigned process number (which is the same as the message number except for line trace records). For a line trace, the sequence number identifies the trace data block.

This topic contains SYSPRINT reports. See the following figures:

- Figure 60 on page 234
- Figure 61 on page 235
- Figure 62 on page 236
- Figure 63 on page 236
- Figure 64 on page 237
- Figure 65 on page 238
- Figure 66 on page 239
- Figure 67 on page 240
- Figure 68 on page 241
- Figure 69 on page 242

You can determine message sequence numbers of frames within the block data from the line trace summary report and the line trace detail report.

Table 38 on page 232 describes the column headers and the trace data contained in this report type. To locate this information about the sample reports, reference the numbers (n) listed in this table to the corresponding numbers (n) shown in the sample reports.

Table 38. SYSPRINT report description

Reference number (n)	Report column headers and the trace data
1	The page heading contains the report name, report parameter, and the date the report was printed or displayed.

Table 38. SYSPRINT report description (continued)	
Reference number (n)	**Report column headers and the trace data**
2	Start-up messages and control parameters. For Figure 61 on page 235, the parameters in effect for the SYSPRINT were SUMMARY=YES and PRINT=YES. Because SUMMARY=YES was specified, records summarized were selected based on the parameters INPUT, START, END, and NODE.
3	Information about the trace file. See Appendix A, “Messages,” on page 57. DSJ201I is an example of a GTF FID message.
4	**DSJ201I Message** This is the trace record description.
5	The contents of TH, RH, and RU. The result unless PRINT=NO is specified. For BSC devices, the first byte (2 characters) of the request/response unit is a pad byte. The actual request or response unit begins with the third character.
6	Direction (transmit or receive).

7	Hexadecimal dump of the data vector. For SDLC MOD 8 and SDLC MOD 128, the station address and control character are separated by a blank for clarity. For example:
	
	`MOD 8 - AA CC DDDDDDDD`
	`MOD 128 - AA CC DDDDDDDD (for unnumbered frames)`
	`MOD 128 - AA CC CC DDDDDDDD (for numbered frames)`
	`BSC/SS - DDDDDDDD`
	
	where:
	
	AA
	Station address
	
	CC
	Control character
	
	DD
	Data

8	The EBCDIC translation of the data vector's hexadecimal dump.
9	The line name.
10	The physical unit name of the device that is being traced.
11	The line adapter status.
12	**Element number** The ACF/TAP-assigned sequence number.
13	**Trace type** Identification of TIC, LINE, BUFFER, or NRF trace.
14	A hexadecimal dump of the trace element with EBCDIC translation to the right.

ESS data, SYSPRINT sample report

```
                                                                  1
          VTAM                                  ADVANCED COMMUNICATIONS FUNCTION
          DATE: mm:dd:yyyy                              TRACE ANALYSIS PROGRAM                                PAGE: 00002
DSJ002I SYSTRACE/SYS008 INPUT FILE OPENED
DSJ004I TRACE FILE PROCESSING BEGINS.....
DSJ220I TRACE FILE RECORDED BY MVS GTF
DSJ223I GTF COMPREHENSIVE TRACE RECORDING MODE    3
DSJ224I GTF TRACE RECORDS ARE TIMESTAMPED
DSJ228I GTF USR OPTION IN EFFECT
DSJ226I GTF RNIO OPTION IN EFFECT
  SOURCE 001    GTS VERSION 001    RELEASE LEVEL SP4.1.0     FMID HBB4410     GRS SYSTEM  HOST6       CPUID FF17324730900000
 4
DSJ201I GTF RECORD 0000002 LENG(00111) D(09.27.1991) T(09.58.27.990756) AID(FF) FID(FD) EID(EFE4)        NCP TRACE
DSJ203I VTAM TRACE 0000001 LENG(00083) D(09.27.1991) T(09.58.27.990558) LRC(00/00) L(ET31L71 )           NCP TRACE    IN   0000000
DSJ204I LINE TRACE 0000001 TYPE(89) LINE(005D) FULL DUPLEX ETHERNET        RECEIVE  TIME(FF) EP(C5) STATUS(81)             0000000
                                                          14
REC. 0000002 *  006F0000  FFFDA48F  56D7B34E  4202EFE4  00F87480  D5C5E3E3  C3D74040  00530000  * .?....u..P.+...U.8..NETTCP  .... *
             *  08A00000  A48F56D7  B341E202  C5E3F3F1  D3F7F140  00000000  00000000  01038300  * ....u..P..S.ET31L71 ..........c. *
             *  5D89FFC5  81800CD7  00108200  00220016  13709000  00000000  000000E2  00100100  * )i.Ea..P..b................S.... *
             *  53008000  00000000  00000000  000000                                            * ................                *
DSJ201I GTF RECORD 0000004 LENG(00249) D(09.27.1991) T(09.58.53.496386) AID(FF) FID(FD) EID(EFE4)        NCP TRACE
DSJ203I VTAM TRACE 0000003 LENG(00221) D(09.27.1991) T(09.58.53.496235) LRC(00/00) L(ET31L71 )           NCP TRACE    IN   0000000
DSJ204I LINE TRACE 0000003 TYPE(89) LINE(005D) FULL DUPLEX ETHERNET        RECEIVE  TIME(FE) EP(C5) STATUS(81)             0000002
REC. 0000004 *  00F90000  FFFDA48F  56F00644  2400EFE4  00F87480  D5C5E3E3  C3D74040  00DD0000  * .9....u..0.....U.8..NETTCP  .... *
             *  08A00000  A48F56F0  063AB600  C5E3F3F1  D3F7F140  00000000  00000000  01038300  * ....u..0....ET31L71 ..........c. *
             *  5D89FEC5  81800CD7  00107501  00220016  13709000  00000000  000000E2  0010014C  * )i.Ea..P..................S...< *
             *  530000A4  13718C00  00000000  000003D9  002D0002  00482C6A  8E10005A  82497400  * ...u..........R...........!b... *
             *  24AAAA03  00000008  06000608  00060400  0210005A  824974AB  01010240  007CE3C4  * ..................!b...... .@TD *
             *  D7001075  02002200  16137288  00000000  00000000  E2001001  4C530000  98137384  * P.........h........S...<...q..d *
             *  00000000  00000005  D9002D00  0200482C  6A8E1000  5A824974  003AAAAA  03000000  * ........R...........!b......... *
             *  08004500  003257B5  0000FF01  AD10AB01  01020A01  01017CE3  C4                  * ......................@TD        *
DSJ201I GTF RECORD 0000005 LENG(00284) D(09.27.1991) T(09.58.53.643057) AID(FF) FID(FD) EID(EFE4)        NCP TRACE
DSJ203I VTAM TRACE 0000004 LENG(00256) D(09.27.1991) T(09.58.53.643012) LRC(00/00) L(ET31L71 )           NCP TRACE    IN   0000000
DSJ204I LINE TRACE 0000004 TYPE(89) LINE(005D) FULL DUPLEX ETHERNET        TRANSMIT TIME(FE) EP(C5) STATUS(C1)             0000008
REC. 0000005 *  011C0000  FFFDA48F  56F02A13  1301EFE4  00F87480  D5C5E3E3  C3D74040  01000000  * ......u..0.....U.8..NETTCP  .... *
             *  08A00000  A48F56F0  2A104201  C5E3F3F1  D3F7F140  00000000  00000000  01038300  * ....u..0....ET31L71 ..........c. *
             *  5D89FEC5  C1800CD7  00107500  0022000E  13B77031  78317C00  000000E2  00100146  * )i.EA..P.............@....S.... *
             *  51000000  00000080  0FD70000  000001E7  002D00FF  FFFFFFFF  FF020048  2C6A8E08  * .........P.....X............... *
             *  06000108  00060400  01020048  2C6A8EAB  01010100  00000000  00AB0101  027CE3C4  * ............................@TD *
             *  D7001075  01002200  1613B86C  3178317C  00000000  E2001001  46510000  00000000  * P.........%...@....S........... *
             *  800FD700  00000002  E7002D00  FFFFFFFF  FFFF0200  482C6A8E  0024AAAA  03000000  * ..P.....X...................... *
             *  08060006  08000604  00010200  482C6A8E  AB010101  00007CE3  C4D70010  75020022  * ......................@TDP...... *
             *  0016135C  E0317831  7C000000  00E20010  01465100  00000000  00800FD7            * ...*....@....S.............P     *
DSJ201I GTF RECORD 0000006 LENG(00284) D(09.27.1991) T(09.58.53.657304) AID(FF) FID(FD) EID(EFE4)        NCP TRACE
DSJ203I VTAM TRACE 0000005 LENG(00256) D(09.27.1991) T(16.55.49.657239) LRC(00/00) L(ET31L62 )           NCP TRACE    IN   0000000
DSJ204I LINE TRACE 0000005 TYPE(0D) LINE(004B) FULL DUPLEX ETHERNET SIT    TRANSMIT TIME(AB) EP(C5) STATUS(C1)             0000000
REC. 0000006 *  011C0000  FFFDA4B6  ADF2E31F  2901EFE4  00F84300  D5C5E3E3  C3D74040  01000000  * ......u..2T....U.8..NETTCP  .... *
             *  08A00000  A4B6ADF2  E3120101  C5E3F3F1  D3F6F240  00000000  00000000  01038300  * ....u..2T...ET31L62 ..........c. *
             *  4B0DABC5  C18000C3  000500A5  C10FC0C3  000500A5  E22FC0C3  000500B1  CC0FC0E2  * ...EA..C...vA..C...vS..C.......S *
             *  00090000  53008000  000000C9  00050021  005301C3  000500A4  000F80C3  000500A4  * ..........I.......C...u...C...u *
             *  310FC0D7  00090000  00220016  108374C3  D90D0000  10837400  00221616  108374C9  * ...P.........c.CR....c.......c.I *
             *  00050021  005100C3  000500B5  000E80D7  00090000  0022000E  10D81CC3  E7090000  * .......C......P.........Q.CX... *
             *  10D81C00  00220EC3  000500B5  6F0ED0E7  002D0002  608C403E  B1020048  2C6A4608  * .Q.....C....?..X....-. ......... *
             *  00450000  1C04D200  003B01CD  0A0A0101  01A20101  0208002F  A50662C1  F82A00E2  * ......K..........s......v..A8..S *
             *  00070046  51000000  00C30005  00A47F1F  D0D9002D  00020048  2C6A4602            * .........C...u"..R.........     *
```

Figure 60. ESS data, SYSPRINT sample report

Frame-relay data, SYSPRINT sample report

```
                                                                  1
          VTAM                                  ADVANCED COMMUNICATIONS FUNCTION
          DATE: mm:dd:yyyy                             TRACE ANALYSIS PROGRAM                                PAGE: 00002
DSJ002I SYSTRACE/SYS008 INPUT FILE OPENED
DSJ004I TRACE FILE PROCESSING BEGINS.....
DSJ220I TRACE FILE RECORDED BY MVS GTF
DSJ223I GTF COMPREHENSIVE TRACE RECORDING MODE    3
DSJ224I GTF TRACE RECORDS ARE TIMESTAMPED
DSJ228I GTF USR OPTION IN EFFECT
DSJ226I GTF RNIO OPTION IN EFFECT
  SOURCE 001    GTS VERSION 001    RELEASE LEVEL SP4.1.0     FMID HBB4410     GRS SYSTEM  TCPIP$T1    CPUID FF47324730900000
 4
DSJ201I GTF RECORD 0000002 LENG(00284) D(12.13.1991) T(11.40.41.372163) AID(FF) FID(FD) EID(EFE4)        NCP TRACE
DSJ203I VTAM TRACE 0000001 LENG(00256) D(12.13.1991) T(11.40.41.372144) LRC(00/00) L(A04F129 )           NCP TRACE    IN   0000000
DSJ204I LINE TRACE 0000001 TYPE(89) LINE(0415) FULL DUPLEX FRAME RELAY     RECEIVE  TIME(94) EP(D4) STATUS(81)             0000000
                                                                 14
REC. 0000002 *  011C0000  FFFDA4F0  3D4D70E0  3704EFE4  00F53A80  D5C5E3F1  F1F0E240  01000000  * ......u0.(.....U.5..NET110S .... *
             *  08800000  A4F03D4D  70DF0F04  C1F0F4C6  F1F2F940  00000000  00000000  01038304  * ....u0.(....A04F129 ..........c. *
             *  158994D4  81900C00  80000000  00240304  05000000  77D70010  58763C10  0068364A  * .imMa................P.........¢ *
             *  60000000  00000000  00E20010  01001300  80000000  00240304  05000000  78D70010  * -........S..................P.. *
             *  64773C10  0068364A  60000000  00000000  00E20010  01001300  80000000  00240304  * .......¢-........S............. *
             *  05000000  79D70010  6C783C10  0068364A  60000000  00000000  00E20010  014C1300  * .....P..%......¢-........S...<.. *
             *  0049364A  60240304  04000000  7BD9001F  00302E40  00111020  18000300  00000100  * ...¢-.......#R..... ........... *
             *  0001F41D  00000100  01000000  03830100  D700106D  793C1000  6821D73C  00000000  * ..4..........c..P.._......P..... *
 12         *  00000000  E2001001  4C130000  5D21D844  24030404  0000007C  D9002B00           * ....S...<...).Q........@R... *
0000003 LINE TRACE IN         LINE(A04F129 )                )
        SDLC 0090302E                         INFORMATION FRAME                  RECEIVE(023)  SEND(024)
        TH   40001110201800030000000100000 1F41D000001000100000003        EXP  OSAF OEF(000001F4 0001) DSAF DEF(00000001 0001)
     5                     ERN(1) VRN(1) TP PRI(0) VR SEQ(003) TG SEQ(018) SEQ(0000) COUNT(00003)
        RH   830100                           FM                                        PACE                     +RSP      IPR/IPM
        RU                                    D700
DSJ201I GTF RECORD 0000003 LENG(00284) D(12.13.1991) T(11.40.41.372260) AID(FF) FID(FD) EID(EFE4)        NCP TRACE
DSJ203I VTAM TRACE 0000002 LENG(00256) D(12.13.1991) T(11.40.41.372242) LRC(00/00) L(A04F129 )           NCP TRACE    IN   0000003
DSJ204I LINE TRACE 0000002 TYPE(89) LINE(0415) FULL DUPLEX FRAME RELAY     RECEIVE  TIME(94) EP(D4) STATUS(81)             0000009
REC. 0000003 *  011C0000  FFFDA4F0  3D4D70E6  4604EFE4  00F53A80  D5C5E3F1  F1F0E240  01000000  * ......u0.(.W...U.5..NET110S .... *
             *  08800000  A4F03D4D  70E52C04  C1F0F4C6  F1F2F940  00000000  00000000  01038304  * ....u0.(.V..A04F129 ..........c. *
             *  158994D4  81900C32  2E400011  10201900  04000000  01000001  F41C0000  01000100  * .imMa.... ..............4....... *
             *  0100DF8B  80008186  41300100  00C6207C  E3C4D700  106D7A3C  10006821  D31C0000  * ......af.....F.@TDP.._:.....L... *
             *  00000000  0000E200  10014C13  00005821  DA542403  04040000  007DD900  2B00342E  * ......S...<.............'R..... *
             *  40001110  201A8005  00000001  000001F4  1C000001  00010001  006C0B81  0081864B  *  .............4.........%.a.af. *
             *  1000E7F3  89567CE3  C4D70010  707B3C10  00683548  90000000  00000000  00E20010  * ..X3i.@TDP...#...............S.. *
             *  014C1300  004C3548  90240304  04000000  81D9001C  00363441  00111010  1B400500  * .<...<..........aR........... .. *
             *  00000100  0001F41D  00000000  00000000  00D70010  787C3C10  006833B9           * ......4..........P...@...... *
0000004 LINE TRACE IN         LINE(A04F129 )                )
        SDLC 0090322E                         INFORMATION FRAME                  RECEIVE(023)  SEND(025)
        TH   40001110201900040000000100000 1F41C0000010001000100DF             OSAF OEF(000001F4 0001) DSAF DEF(00000001 0001)
                              ERN(1) VRN(1) TP PRI(0) VR SEQ(004) TG SEQ(019) SEQ(0001) COUNT(00223)
        RH   8B8000                           FM     DR1                                        FMT          +RSP      CDINIT
        RU                    NS(818641)      30010000C6207CE3C44040

0000005 LINE TRACE IN         LINE(A04F129 )                )
        SDLC 0090342E                         INFORMATION FRAME                  RECEIVE(023)  SEND(026)
        TH   40001110201A80050000000100000 1F41C00000100010001006C             OSAF OEF(000001F4 0001) DSAF DEF(00000001 0001)
                              ERN(1) VRN(1) TP PRI(0) VR SEQ(005) TG SEQ(01A) SEQ(0001) COUNT(00108)
        RH   0B8100                           FM     DR1                                        PACE         FMT          REQ       CDCINIT
        RU                    NS(81864B)      1000E7F389567CE3C4D700

0000006 LINE TRACE IN         LINE(A04F129 )                )
        SDLC 00903634                         INFORMATION FRAME                  RECEIVE(026)  SEND(027)
        TH   41001110101B40050000000100000 1F41D000000000000000000        EXP  OSAF OEF(000001F4 0000) DSAF DEF(00000001 0000)
                              ERN(1) VRN(1) TP PRI(0) VR SEQ(005) TG SEQ(01B) SEQ(0000) COUNT(00000)
        DATA                                  D7000081864B
```

Figure 61. Frame-relay data, SYSPRINT sample report

IBM 3710 cluster controller, SYSPRINT sample report

```
                                                                1
          VTAM                                  ADVANCED COMMUNICATIONS FUNCTION
          DATE: mm:dd:yyyy                            TRACE ANALYSIS PROGRAM                              PAGE: 00002
DSJ002I SYSTRACE/SYS008 INPUT FILE OPENED
DSJ004I TRACE FILE PROCESSING BEGINS.....
DSJ221I TRACE FILE RECORDED BY VS1 OR SVS GTF
DSJ223I GTF COMPREHENSIVE TRACE RECORDING MODE     3
DSJ225I GTF TRACE RECORDS ARE NOT TIMESTAMPED
DSJ229I GTF USR OPTION NEEDED FOR VTAM TRACE TYPE=LINE AND TYPE=BUF
DSJ227I GTF RNIO OPTION NEEDED FOR VTAM TRACE TYPE=RNIO
DSJ201I GTF RECORD 0000005 LENG(00547)                                AID(FF) FID(FD) EID(EFF2)          NCP TRACE
DSJ203I VTAM TRACE 0000001 LENG(00539) D(03.19.1991) T(14.47.20.564714) LRC(00/00) C(        )           NETCTLR TR   IN
                                                  14
REC. 0000005 *  02230000  FFFDEFF2  021B0000  0AA00000  97109F93  ACBEA200  40404040  40404040  * .......2........p..l..s.
             *  00000000  00000000  010383F1  00080000  000114C3  F1D3D5C3  C8D440C3  C8C1D4C5  * ..........c1.......C1LNCHM CHAME
             *  D3C5D680  021469C1  51000210  28C15182  061469C1  542C0000  0000000B  80000103  * LEO....A.....A.b...A...........
             *  83000008  00000000  021028C1  71800214  69C15100  021028C1  71800214  69C15100  * c..........A.....A.....A.....A..
             *  021028C1  71800214  69C15100  021028C1  71800214  69C15100  021028C1  71800214  * ...A.....A.....A.....A.....A....
             *  69C15100  021028C1  71800214  69C15100  021028C1  71800214  69C15100  021028C1  * .A.....A.....A.....A.....A.....A
             *  71800214  69C15100  021028C1  71800214  69C15100  021028C1  71800214  69C15100  * .....A.....A.....A.....A.....A..
             *  021028C1  71800214  69C15100  021028C1  71800214  69C15100  021028C1  71800214  * ...A.....A.....A.....A.....A....
             *  69C15100  00000000  00000000  00000000  00000000  00000000  00000000  00000000  * .A.............................
             *  00000000  00000000  00000000  00000000  00000000  00000000  00000000  00000000  * ................................
             *  00000000  00000000  00000000  00000000  00000000  00000000  00000000  00000000  * ................................
             *  00000000  00000000  00000000  00000000  00000000  00000000  00000000  00000000  * ................................
             *  00000000  00000000  00000000  00000000  00000000  00000000  00000000  00000000  * ................................
             *  00000000  00000000  00000000  00000000  00000000  00000000  00000000  00000000  * ................................
             *  00000000  00000000  00000000  00000000  00000000  00000000  00000000  00001469  * ................................
             *  C1510002  1028C171  80021469  C1510002  1028C171  80021469  C1510002  1028C171  * A.....A.....A.....A.....A.....A.
             *  80021469  C1510002  1028C171  80021469  C1510002  1028C171  80021469  C1510002  * ....A.....A.....A.....A.....A...
             *  1028C1                                                                          * ..A
 6                                                 9         10                                        11
DSJ204I NETCTLR TR 0000005 TYPE(08) SDLC MOD 8    L(C1LNCHM ) N(CHAMELEO)          TIME(00)        STATUS(00)
                                                 7                                                        8
TRANSMIT 00002  1469  C1 51                                                                       * A. *
RECEIVE  00002  1028  C1 51                                                                       * A. *
TRANSMIT 00518  1469  C1 54    2C000000 00000B80 00010383 00000800 0000                           * A...........c...... *
RECEIVE  00002  1028  C1 71                                                                       * A. *
TRANSMIT 00002  1469  C1 51                                                                       * A. *
RECEIVE  00002  1028  C1 71                                                                       * A. *
TRANSMIT 00002  1469  C1 51                                                                       * A. *
RECEIVE  00002  1028  C1 71                                                                       * A. *
TRANSMIT 00002  1469  C1 51                                                                       * A. *
RECEIVE  00002  1028  C1 71                                                                       * A. *
TRANSMIT 00002  1469  C1 51                                                                       * A. *
RECEIVE  00002  1028  C1 71                                                                       * A. *
TRANSMIT 00002  1469  C1 51                                                                       * A. *
RECEIVE  00002  1028  C1 71                                                                       * A. *
TRANSMIT 00002  1469  C1 51                                                                       * A. *
```

Figure 62. IBM 3710 cluster controller, SYSPRINT sample report

NRF data, SYSPRINT sample report

```
                                                                1
          VTAM                                  ADVANCED COMMUNICATIONS FUNCTION
          DATE: mm:dd:yyyy                            TRACE ANALYSIS PROGRAM                              PAGE: 00002
DSJ002I SYSTRACE/SYS008 INPUT FILE OPENED
DSJ004I TRACE FILE PROCESSING BEGINS.....
DSJ220I TRACE FILE RECORDED BY MVS GTF
DSJ223I GTF COMPREHENSIVE TRACE RECORDING MODE     3
DSJ224I GTF TRACE RECORDS ARE TIMESTAMPED
DSJ228I GTF USR OPTION IN EFFECT
DSJ226I GTF RNIO OPTION IN EFFECT
 4
DSJ201I GTF RECORD 0000004 LENG(00105) D(02.21.1991) T(11.02.54.694896) AID(FF) FID(FD) EID(EFE4)        NCP TRACE
DSJ203I VTAM TRACE 0000003 LENG(00077) D(02.21.1991) T(11.02.54.690696) LRC(00/00) L(CRFLINE )          NCP TRACE    IN   0000000
DSJ204I LINE TRACE 0000004 TYPE(89) LINE(509E)             NRF                       TIME(B7)        STATUS(01)            0000000
                                                  14
REC. 0000004 *  00690000  FFFD96EE  7B0E2CDF  0460EFE4  00FD5218  D5C5E3F8  F2404040  004D0000  * ......o.#....-.U....NET82   .(..
             *  08800000  96EE7B0E  2BD88E40  C3D9C6D3  C9D5C540  00000000  00000000  01038350  * ....o.#..Q. CRFLINE ..........c&
             *  9E89B7D9  01000C80  2050B2D0  01000200  0E0B8000  81062900  00D70321  C200080C  * .i.R.....&..........a....P..B...
 12         *  B8000000  00000F68  8C                                                          * .........
0000001 NRF TRACE            LINE(CRFLINE )
        DATA    50B2D001  0002000E  0B800081  06290000  D70321C2  00080CB8  00000000  000F688C  * &..........a....P..B............

DSJ201I GTF RECORD 0000005 LENG(00105) D(02.21.1991) T(11.02.54.699556) AID(FF) FID(FD) EID(EFE4)        NCP TRACE
DSJ203I VTAM TRACE 0000004 LENG(00077) D(02.21.1991) T(11.02.54.697190) LRC(00/00) L(CRFLINE )          NCP TRACE    IN   0000001
DSJ204I LINE TRACE 0000005 TYPE(89) LINE(509E)             NRF                       TIME(B7)        STATUS(01)            0000000
REC. 0000005 *  00690000  FFFD96EE  7B0E2E02  4240EFE4  00FD5218  D5C5E3F8  F2404040  004D0000  * ......o.#.... .U....NET82   .(..
             *  08800000  96EE7B0E  2D6E6800  C3D9C6D3  C9D5C54000000000  00000000  01038350  * ....o.#..>..CRFLINE ..........c&
             *  9E89B7D9  01000C80  20D00150  B2000200  068B8000  81062900  00E20321  0DFFFFFF  * .i.R.......&........a....S......
             *  FF00080C  B8000F68  8C                                                          * .........
0000002 NRF TRACE            LINE(CRFLINE )
        DATA    D00150B2  00020006  8B800081  06290000  E203210D  FFFFFFFF  00080CB8  000F688C  * ..&........a....S..............

DSJ201I GTF RECORD 0000006 LENG(00105) D(02.21.1991) T(11.02.57.819206) AID(FF) FID(FD) EID(EFE4)      NCP TRACE
DSJ203I VTAM TRACE 0000005 LENG(00077) D(02.21.1991) T(11.02.57.816220) LRC(00/00) L(CRFLINE )          NCP TRACE    IN   0000002
DSJ204I LINE TRACE 0000006 TYPE(89) LINE(509E)             NRF                       TIME(D4)        STATUS(01)            0000000
REC. 0000006 *  00690000  FFFD96EE  7B1127A4  6260EFE4  00FD5218  D5C5E3F8  F2404040  004D0000  * ......o.#..u.-.U....NET82   .(..
             *  08800000  96EE7B11  26E9C460  C3D9C6D3  C9D5C540  00000000  00000000  01038350  * ....o.#..ZD-CRFLINE ..........c&
             *  9E89D4D9  01000C80  2050B250  7C000100  056B0000  320F0000  00D7030F  C200080C  * .iMR.....&.1...,.......P..B...
             *  B8000000  00000F80  1C                                                          * .........
0000003 NRF TRACE            LINE(CRFLINE )
        DATA    50B2507C  00010005  6B000032  0F000000  D7030FC2  00080CB8  00000000  000F801C  * &.1...,.......P..B............
```

Figure 63. NRF data, SYSPRINT sample report

TIC data, SYSPRINT sample report

```
          VTAM                                ADVANCED COMMUNICATIONS FUNCTION
          DATE: mm:dd:yyyy                          TRACE ANALYSIS PROGRAM                              PAGE: 00002
DSJ002I SYSTRACE/SYS008 INPUT FILE OPENED
DSJ004I TRACE FILE PROCESSING BEGINS.....
DSJ220I TRACE FILE RECORDED BY MVS GTF
DSJ223I GTF COMPREHENSIVE TRACE RECORDING MODE     3
DSJ224I GTF TRACE RECORDS ARE TIMESTAMPED
DSJ228I GTF USR OPTION IN EFFECT
DSJ226I GTF RNIO OPTION IN EFFECT
 4
DSJ201I GTF RECORD 0000002 LENG(00284) D(03.21.1991) T(15.53.53.933257) AID(FF) FID(FD) EID(EFE4)        NCP TRACE
DSJ203I VTAM TRACE 0000001 LENG(00256) D(03.21.1991) T(15.53.53.931944) LRC(00/00) L(DNTRIP1 )           NCP TRACE    IN   0000000
DSJ204I LINE TRACE 0000002 TYPE(89) LINE(0082)     TIC INTERNAL TRACE              TIME(FF) EP(C6) STATUS(81)             0000000
                                                    14
REC. 0000002 *  011C0000  FFFD9AA9  03B1743C  9680EFE4  00FEF080  D5C5E3D5  E3D9C940  01000000  * .......z....o..U..0.NETNTRI ....
             *  08A00000  9AA903B1  73EA8A00  C4D5E3D9  C9D7F140  00000000  00000000  01038300  * .....z......DNTRIP1 ..........c.
             *  8289FFC6  81000000  54DB05B9  42CB0000  40DB09C2  64CB0705  10CB007F  BFDB02B9  * bi.Fa........... ..B......."....
             *  42CB007F  BFDB05B9  42CB0C00  00CB00FF  FFDB06B9  42CB00FF  FFDB06B9  42CB00FF  * ..."............................
             *  FFDB07B9  42CB060F  90CB060F  90CB060F  90CB0904  04CB00FF  FFDB0AB9  420054CB  * ................................
             *  00FFFFDB  09B942CB  007FBFDB  02B942CB  070580CB  007FBFDB  02B942CB  007FBFDB  * ........."........."......."..
             *  05B942CB  0C0000CB  00FFFFDB  06B942CB  00FFFFDB  000740CB  070740CB  007FBFDB  * ...................... ... ..".."
             *  02B942CB  007FBFDB  05B942CB  0C0000CB  00FFFF00  54DB09B9  42CB0705  10CB007F  * ....."........................."
 12     13  *  BFDB07B9  42CB0607  40CB007F  BFDB02B9  42CB007F  BFDB05B9  42CB0C00           * ........ ..".......".........
0000001 TIC     DB05B942  CB000040  DB09C264  CB070510  CB007FBF  DB02B942  CB007FBF  DB05B942  *....... ..B......."......."......
                CB0C0000  CB00FFFF  DB06B942  CB00FFFF  DB06B942  CB00FFFF  DB07B942  CB060F90  *......................
                CB060F90  CB060F90  CB090404  CB00FFFF  DB0AB942                                *....................
0000002 TIC     CB00FFFF  DB09B942  CB007FBF  DB02B942  CB070580  CB007FBF  DB02B942  CB007FBF  *........."........."......."..
                DB05B942  CB0C0000  CB00FFFF  DB06B942  CB00FFFF  DB000740  CB070740  CB007FBF  *...................... ... ..".
                DB02B942  CB007FBF  DB05B942  CB0C0000  CB00FFFF                                *......"............
DSJ201I GTF RECORD 0000003 LENG(00284) D(03.21.1991) T(15.53.53.936038) AID(FF) FID(FD) EID(EFE4)        NCP TRACE
DSJ203I VTAM TRACE 0000002 LENG(00256) D(03.21.1991) T(15.53.53.934083) LRC(00/00) L(DNTRIP1 )           NCP TRACE    IN   0000002
DSJ204I LINE TRACE 0000003 TYPE(89) LINE(0082)     TIC INTERNAL TRACE              TIME(FF) EP(C6) STATUS(81)             0000000
REC. 0000003 *  011C0000  FFFD9AA9  03B174EA  6E00EFE4  00FEF080  D5C5E3D5  E3D9C940  01000000  * .......z....>..U..0.NETNTRI ....
             *  08800000  9AA903B1  74703620  C4D5E3D9  C9D7F140  00000000  00000000  01038300  * .....z......DNTRIP1 ..........c.
             *  8289FFC6  81000000  CB00FFFF  DB06B942  CB060740  CB060740  CB090404  CB00FFFF  * bi.Fa............. ... ........
             *  DB06B942  CB00FFFF  DB0AB942  CB00FFFF  DB02B942  0054CB00  FFFFDB09  B942CB07  * ................................
             *  0580CB00  7FBFDB02  B942CB00  7FBFDB05  B942CB0C  0000CB00  FFFFDB00  06D0CB07  * ...."......."...................
             *  06D0CB00  7FBFDB06  B942CB00  7FBFDB02  B942CB00  7FBFDB05  B942CB0C  0000CB00  * ...."......."......."...........
             *  FFFFDB06  B942CB00  FFFF0054  DB09B942  CB070510  CB007FBF  DB02B942  CB007FBF  * ......................."......."
             *  DB05B942  CB0C0000  CB00FFFF  DB06B942  CB00FFFF  DB07B942  CB0606D0  CB0606D0  * ................................
             *  CB0606D0  CB090404  CB00FFFF  DB0AB942  CB00FFFF  DB02B942  CB00FFFF            * ............................
0000003 TIC     DB09B942  CB070510  CB007FBF  DB07B942  CB060740  CB007FBF  DB02B942  CB007FBF  *........."........ .."......."."
                DB05B942  CB0C0000  CB00FFFF  DB06B942  CB060740  CB060740  CB090404  CB00FFFF  *................... ... ........
                DB06B942  CB00FFFF  DB0AB942  CB00FFFF  DB02B942                                *....................
0000004 TIC     CB00FFFF  DB09B942  CB070580  CB007FBF  DB02B942  CB007FBF  DB05B942  CB0C0000  *............."......."........."
                CB00FFFF  DB0006D0  CB0706D0  CB007FBF  DB06B942  CB007FBF  DB02B942  CB007FBF  *............."......."......."."
                DB05B942  CB0C0000  CB00FFFF  DB06B942  CB00FFFF                                *....................
DSJ201I GTF RECORD 0000004 LENG(00284) D(03.21.1991) T(15.53.53.947047) AID(FF) FID(FD) EID(EFE4)        NCP TRACE
DSJ203I VTAM TRACE 0000003 LENG(00256) D(03.21.1991) T(15.53.53.938613) LRC(00/00) L(DNTRIP1 )           NCP TRACE    IN   0000004
DSJ204I LINE TRACE 0000004 TYPE(89) LINE(0082)     TIC INTERNAL TRACE              TIME(FF) EP(C6) STATUS(81)             0000000
REC. 0000004 *  011C0000  FFFD9AA9  03B1779A  7220EFE4  00FEF080  D5C5E3D5  E3D9C940  01000000  * .......z.......U..0.NETNTRI ....
```

Figure 64. TIC data, SYSPRINT sample report

VTAM buffer trace data (alternate), SYSPRINT sample report

```
                                                                  1
          VTAM                                   ADVANCED COMMUNICATIONS FUNCTION
          DATE: mm:dd:yyyy                             TRACE ANALYSIS PROGRAM                                PAGE: 00002
DSJ002I SYSTRACE/SYS008 INPUT FILE OPENED
DSJ004I TRACE FILE PROCESSING BEGINS.....
DSJ220I TRACE FILE RECORDED BY MVS GTF
DSJ223I GTF COMPREHENSIVE TRACE RECORDING MODE     3
DSJ224I GTF TRACE RECORDS ARE TIMESTAMPED
DSJ228I GTF USR OPTION IN EFFECT
DSJ226I GTF RNIO OPTION IN EFFECT
 4
DSJ201I GTF RECORD 0000002 LENG(00094) D(06.01.1991) T(17.27.13.109204) AID(FF) FID(FD) EID(EFEF)        VTAM BUFFER
DSJ203I VTAM TRACE 0000001 LENG(00066) D(06.01.1991) T(17.27.13.108080) LRC(00/00)                      VTAM PBUFFER OUT  0000000
DSJ203I                    S(         VTAM    ) D(        NA04N   )
                                                        14
REC. 0000002 *  005E0000  FFFD976D  BFE9F28D  4C60EFEF  00FA9300  D5C5E3F8  F4D74040  00420000  * .;....p_.Z2.<-....l.NET84P  .... *
             *  03000000  976DBFE9  F2470000  E5E3C1D4  40404040  D5C1F0F4  D5404040  40000002  * ....p_.Z2...VTAM    NA04N    ... *
 12              *  00000000  00000004  0000000C  1C000000  00010025  00080B80  0001020A  002F      * ...............................*
0000001 BFFR TRACE OUT        ORIGIN(VTAM    )    DESTINATION(NA04N   )                 DATE(06.01.1991)  VTAM/TIME(17.27.13.108080)
        TH   4000000200000000000000040000000C1C000000000100250008            OSAF OEF(0000000C 0001) DSAF DEF(00000004 0000)
                           ERN(0) VRN(0) TP PRI(2) VR SEQ(000) TG SEQ(000) SEQ(0025) COUNT(00008)
    5   RH   0B8000                     FM     DR1                                                FMT          REQ       ACTLINK
        RU CODE                NS(01020A)
        RU DATA 01020A002F                                                                  * .....                              *
DSJ201I GTF RECORD 0000003 LENG(00092) D(06.01.1991) T(17.27.13.306346) AID(FF) FID(FD) EID(EFEF)        VTAM BUFFER
DSJ203I VTAM TRACE 0000002 LENG(00064) D(06.01.1991) T(17.27.13.306205) LRC(00/00)                      VTAM PBUFFER IN   0000001
DSJ203I                    S(         NA04N   ) D(         VTAM    )
REC. 0000003 *  005C0000  FFFD976D  BFEA22AE  AC40EFEF  00FA9300  D5C5E3F8  F4D74040  00400000  * .*....p_..... ....l.NET84P  . .. *
             *  03800000  976DBFEA  22A5D080  D5C1F0F4  D5404040  E5E3C1D4  40404040  40000302  * ....p_...v..NA04N   VTAM     ... *
             *  20000061  0000000C  00000004  1C000001  00000025  00068B80  0001020A            * .../........................     *
0000002 BFFR TRACE IN         ORIGIN(NA04N   )    DESTINATION(VTAM    )                 DATE(06.01.1991)  VTAM/TIME(17.27.13.306205)
        TH   4000030220000061000000C000000041C00001000000250006            OSAF OEF(00000004 0000) DSAF DEF(0000000C 0001)
                           ERN(3) VRN(0) TP PRI(2) VR SEQ(061) TG SEQ(000) SEQ(0025) COUNT(00006)
        RH   8B8000                     FM     DR1                                                FMT          +RSP      ACTLINK
        RU CODE                NS(01020A)
        RU DATA 01020A                                                                      * ...                                *
DSJ201I GTF RECORD 0000004 LENG(00284) D(06.01.1991) T(17.27.13.315511) AID(FF) FID(FD) EID(EFEF)        VTAM BUFFER
DSJ203I VTAM TRACE 0000003 LENG(00256) D(06.01.1991) T(17.27.13.315352) LRC(00/00)                      VTAM PBUFFER IN   0000002
DSJ203I                    S(         NA04N   ) D(         VTAM    )
REC. 0000004 *  011C0000  FFFD976D  BFEA24EB  7C40EFEF  00FA9300  D5C5E3F8  F4D74040  01000000  * ......p_....@ ....l.NET84P  .... *
             *  03800000  976DBFEA  24E18480  D5C1F0F4  D5404040  E5E3C1D4  40404040  40000302  * ....p_....d.NA04N   VTAM     ... *
             *  20000062  0000000C  00000004  1C000001  0000000C  016E0B80  00010383  00004000  * .....................>.....c.. . *
             *  0001000A  8FC00000  00000000  00000F20  00000000  00000000  40000302  20000000  * ......................... ....... *
             *  0000000C  00000004  1C000001  00000024  00068B80  00010302  0F220000  00000000  * ................................. *
             *  00004000  02020002  80680000  00040000  000C1C00  00000001  00250008  0B800001  * .. ............................. *
             *  020A002F  0F1A0000  00000000  00004000  03022000  00000000  000C0000  00041C00  * ............. ................. *
             *  00000000  00000000  07220000  00000000  00014000  00522000  00000000  00040000  * ................. ............. *
             *  00041C00  00000001  00020008  0B800001  020A000D  0F220000  00000000            * ............................     *
0000003 BFFR TRACE IN         ORIGIN(NA04N   )    DESTINATION(VTAM    )                 DATE(06.01.1991)  VTAM/TIME(17.27.13.315352)
        TH   4000030220000062000000C000000041C0000010000000C016E            OSAF OEF(00000004 0000) DSAF DEF(0000000C 0001)
                           ERN(3) VRN(0) TP PRI(2) VR SEQ(062) TG SEQ(000) SEQ(000C) COUNT(00366)
        RH   0B8000                     FM     DR1                                                FMT          REQ       RECTRD
        RU CODE                NS(010383)
        RU DATA 0103830000400000 01000A8FC0000000 00000000000F2000 0000000000000040  * ..c.. .......................  *
                0003022000000000 00000C000000041C 0000010000002400 068B80000103020F  * ................................ *
                2200000000000000 0040000202000280 6800000004000000 0C1C000000000100  * ......... ...................... *
                2500080B80000102 0A002F0F1A000000 0000000000400003 0220000000000000  * ..................... .......... *
                0C000000041C0000 0000000000000007 2200000000000000 0140000052200000  * ......................... ...... *
                0000000004000000 041C000000000100 0200080B80000102 0A000D0F22000000  * ................................ *
                000000                                                              * ...                              *
DSJ265I RECORD 0000005 IGNORED - CONTINUITY ERROR DUE TO SPANNED RECORD
DSJ265I RECORD 0000006 IGNORED - CONTINUITY ERROR DUE TO SPANNED RECORD
DSJ201I GTF RECORD 0000007 LENG(00094) D(06.01.1991) T(17.27.13.680318) AID(FF) FID(FD) EID(EFEF)        VTAM BUFFER
```

Figure 65. VTAM buffer trace data (alternate), SYSPRINT sample report

VTAM buffer trace confidential data, SYSPRINT sample report

```
                                                                    1
          VTAM                                  ADVANCED COMMUNICATIONS FUNCTION
          DATE: mm:dd:yyyy                             TRACE ANALYSIS PROGRAM                                PAGE: 00002
DSJ002I SYSTRACE/SYS008 INPUT FILE OPENED
DSJ004I TRACE FILE PROCESSING BEGINS.....
DSJ220I TRACE FILE RECORDED BY MVS GTF
DSJ223I GTF COMPREHENSIVE TRACE RECORDING MODE     3
DSJ224I GTF TRACE RECORDS ARE TIMESTAMPED
DSJ228I GTF USR OPTION IN EFFECT
DSJ226I GTF RNIO OPTION IN EFFECT
  SOURCE 001    GTS VERSION 001    RELEASE LEVEL SP5.2.2     FMID JBB5522     GRS SYSTEM  A01G550     CPUID FF07791096720000"
 4
DSJ201I GTF RECORD 0000199 LENG(00105) D(03.30.1999) T(15.08.43.234815) AID(FF) FID(FD) EID(EFEF)        VTAM BUFFER
DSJ203I VTAM TRACE 0000001 LENG(00077) D(03.30.1999) T(15.08.43.234749) LRC(00/00)                      VTAM FBUFFER IN   0000000
DSJ203I                    S(NETA    .A01A721 ) D(NETA    .TSO0002 ) SEGMENT(COMPLETE)
  12    13
000001  BFFR TRACE IN         ORIGIN(A01A721 )    DESTINATION(TSO0002 )  TIME(15.08.43.234749)  DATE(03.30.1999)

   5    TH   4000000000000000000000002000000021C000147033A000B0003             OSAF OEF(00000002 033A) DSAF DEF(00000002 0147)
                            ERN(0) VRN(0) TP PRI(0) VR SEQ(000) TG SEQ(000) SEQ(000B) COUNT(00003)
        RH   838000                     FM     DR1                                                          +RSP
DSJ252I RECORD 0000199 - REMAINING DATA SUPRESSED - CONFIDENTIAL/ENCRYPTED TEXT INDICATED

DSJ201I GTF RECORD 0000200 LENG(00105) D(03.30.1999) T(15.08.43.234982) AID(FF) FID(FD) EID(EFEF)        VTAM BUFFER
DSJ203I VTAM TRACE 0000002 LENG(00077) D(03.30.1999) T(15.08.43.234977) LRC(00/00)                      VTAM FBUFFER IN   0000001
DSJ203I                    S(NETA    .A01A721 ) D(NETA    .TSO0002 ) SEGMENT(COMPLETE)

0000002 BFFR TRACE IN         ORIGIN(A01A721 )    DESTINATION(TSO0002 )  TIME(15.08.43.234977)  DATE(03.30.1999)

        TH   4000000000000000000000002000000021C000147033A0004000A             OSAF OEF(00000002 033A) DSAF DEF(00000002 0147)
                           ERN(0) VRN(0) TP PRI(0) VR SEQ(000) TG SEQ(000) SEQ(0004) COUNT(00010)
        RH   030000                     FM                                                                   REQ
DSJ252I RECORD 0000200 - REMAINING DATA SUPRESSED - CONFIDENTIAL/ENCRYPTED TEXT INDICATED

DSJ201I GTF RECORD 0000201 LENG(00105) D(03.30.1999) T(15.08.44.576215) AID(FF) FID(FD) EID(EFEF)        VTAM BUFFER
DSJ203I VTAM TRACE 0000003 LENG(00077) D(03.30.1999) T(15.08.44.576196) LRC(00/00)                      VTAM FBUFFER OUT  0000002
DSJ203I                    S(NETA    .TSO0002 ) D(NETA    .A01A721 ) SEGMENT(COMPLETE)

0000003 BFFR TRACE OUT        ORIGIN(TSO0002 )    DESTINATION(A01A721 )  TIME(15.08.44.576196)  DATE(03.30.1999)

        TH   4000000000000000000000002000000021C00033A0147000C049D             OSAF OEF(00000002 0147) DSAF DEF(00000002 033A)
                           ERN(0) VRN(0) TP PRI(0) VR SEQ(000) TG SEQ(000) SEQ(000C) COUNT(01181)
        RH   038000                     FM     DR1                                                          REQ
DSJ252I RECORD 0000201 - REMAINING DATA SUPRESSED - CONFIDENTIAL/ENCRYPTED TEXT INDICATED

DSJ201I GTF RECORD 0000202 LENG(00105) D(03.30.1999) T(15.08.58.504714) AID(FF) FID(FD) EID(EFEF)        VTAM BUFFER
DSJ203I VTAM TRACE 0000004 LENG(00077) D(03.30.1999) T(15.08.58.504693) LRC(00/00)                      VTAM FBUFFER IN   0000003
DSJ203I                    S(NETA    .A01A721 ) D(NETA    .TSO0002 ) SEGMENT(COMPLETE)

0000004 BFFR TRACE IN         ORIGIN(A01A721 )    DESTINATION(TSO0002 )  TIME(15.08.58.504693)  DATE(03.30.1999)

        TH   4000000000000000000000002000000021C000147033A000C0003             OSAF OEF(00000002 033A) DSAF DEF(00000002 0147)
                           ERN(0) VRN(0) TP PRI(0) VR SEQ(000) TG SEQ(000) SEQ(000C) COUNT(00003)
        RH   838000                     FM     DR1                                                          +RSP
DSJ252I RECORD 0000202 - REMAINING DATA SUPRESSED - CONFIDENTIAL/ENCRYPTED TEXT INDICATED
```

Figure 66. VTAM buffer trace confidential data, SYSPRINT sample report

VTAM buffer, SYSPRINT sample report

The SYSPRINT report shown in Figure 67 on page 240 displays the complete buffer trace data when DUMP=YES is specified. For further information, see the information about the buffer contents trace in z/OS Communications Server: SNA Diagnosis Vol 2, FFST Dumps and the VIT.

```
                                                                  1
          VTAM                                   ADVANCED COMMUNICATIONS FUNCTION
          DATE: mm:dd:yyyy                              TRACE ANALYSIS PROGRAM                                PAGE: 00002
DSJ002I SYSTRACE/SYS008 INPUT FILE OPENED
DSJ004I TRACE FILE PROCESSING BEGINS.....
DSJ232I GCS TRACE DATASET
DSJ223I GTF COMPREHENSIVE TRACE RECORDING MODE    3
DSJ224I GTF TRACE RECORDS ARE TIMESTAMPED
DSJ229I GTF USR OPTION NEEDED FOR VTAM TRACE TYPE=LINE AND TYPE=BUF
DSJ227I GTF RNIO OPTION NEEDED FOR VTAM TRACE TYPE=RNIO
 4                                                                   3a
DSJ201I GTF RECORD 0000002 LENG(00072) D(06.26.1991) T(17.53.26.160638) AID(FF) FID(FD) EID(EFE1)        GCS  VTAM
                                                 14
REC. 0000002 *  00480000  E5E3C1D4  40404040  003C0000  FFFD9957  E783E44F  E000EFE1  00000000  * ....VTAM    ......r.XcU|........
             *  E5E3C1D4  40404040  D4E2C740  230B7DFA  F3F1F5C9  000B7EEE  D9C1E3C9  C5E7E3F0  * VTAM    MSG ..'.315I..=.RATIEXT0
             *  F0F0C1D7  C940E2D4                                                            * 00API SM
DSJ201I GTF RECORD 0000003 LENG(00072) D(06.26.1991) T(17.53.26.206962) AID(FF) FID(FD) EID(EFE1)        GCS  VTAM
REC. 0000003 *  00480000  E5E3C1D4  40404040  003C0000  FFFD9957  E783EF9F  2000EFE1  00000000  * ....VTAM    ......r.Xc..........
             *  E5E3C1D4  40404040  D7D6E2E3  23A1C91E  00000000  00000000  00000000  00000000  * VTAM    POST..I................
             *  FFFFFFFC  8088B010                                                            * .....h..
DSJ201I GTF RECORD 0000004 LENG(00072) D(06.26.1991) T(17.53.26.264562) AID(FF) FID(FD) EID(EFE1)        GCS  VTAM
REC. 0000004 *  00480000  E5E3C1D4  40404040  003C0000  FFFD9957  E783FDAF  2000EFE1  00000000  * ....VTAM    ......r.Xc..........
             *  E5E3C1D4  40404040  E5E3C1D3  23A0FBB6  0009C4D0  000000E6  00000178  00000000  * VTAM    VTAL......D....W
             *  00000000  00000000                                                            * ........
DSJ201I GTF RECORD 0000438 LENG(00082) D(06.26.1991) T(17.54.47.342759) AID(FF) FID(00) EID(8100)        VTAM RNIO IN
REC. 0000438 *RA00520000001E5E3C1D4034040404040260046000007.FF00995727E7D1502A0070008100000000000(0*0....VTAM    ......R.XJ&...a.....
             *  0000E5E3  C1D44040  40404000  00002000  00510000  00010000  00040E00  0006000E  * ..VTAM     ....................
 12         *  00000012  8B80000F  01035000  62180000  0024                                    * ..........&.......
0000001 RNIO TRACE IN         ORIGIN(00000004)    DESTINATION(00000001)  TIME(17.54.47.342759)  DATE(06.26.1991)
        TH   4000000020000051000000010000000040E000006000E00000012             OSAF OEF(00000004 000E) DSAF DEF(00000001 0006)
     5                     ERN(0) VRN(0) TP PRI(0) VR SEQ(051) TG SEQ(000) SEQ(0000) COUNT(00018)
        RH   8B8000                     FM     DR1                                             FMT          +RSP      RD TRANS
        RU                0F010350006218
DSJ201I GTF RECORD 0000467 LENG(00116) D(06.26.1991) T(17.54.51.263770) AID(FF) FID(FD) EID(EFEF)        GCS  VTAM
DSJ203I VTAM TRACE 0000002 LENG(00076) D(06.26.1991) T(17.54.51.245220) LRC(00/00) S(LAXRN   ) D(VM    ) VTAM BUFFER  IN   0000001
REC. 0000467 *  00740000  E5E3C1D4  40404040  00680000  FFFD9957  E7D50D71  A000EFEF  00000000  * ....VTAM    ......R.XN..........
             *  E5E3C1D4  40404040  004C0000  03800000  9957E7D5  08EA4000  D3C1E7D9  D5404040  * VTAM    .<......r.XN.. .
             *  E5D44040  40404040  40000000  20000051  00000001  00000004  0E000006  000E0000  * VM       ......................
             *  00128B80  000F0103  50006218  40407D5B  60115B60                                * ........&...  '$-.$-
0000002 BFFR TRACE IN         ORIGIN(LAXRN   )    DESTINATION(VM      )  TIME(17.54.51.245220)  DATE(06.26.1991)
        TH   4000000020000051000000010000000040E000006000E00000012             OSAF OEF(00000004 000E) DSAF DEF(00000001 0006)
                          ERN(0) VRN(0) TP PRI(0) VR SEQ(051) TG SEQ(000) SEQ(0000) COUNT(00018)
        RH   8B8000                     FM     DR1                                             FMT          +RSP      RD TRANS
        RU                0F010350006218 40407D5B60115B60
DSJ201I GTF RECORD 0000641 LENG(00296) D(06.26.1991) T(17.55.06.569734) AID(FF) FID(FD) EID(EFEF)        GCS  VTAM
DSJ203I VTAM TRACE 0000005 LENG(00256) D(06.26.1991) T(17.55.06.561974) LRC(00/00) S(VM      ) D(LAXRN ) VTAM BUFFER  OUT  0000002
REC. 0000641 *  01280000  E5E3C1D4  40404040  011C0000  FFFD9957  E7E3A640  6000EFEF  00000000  * ....VTAM    ......R.XTW -.......
             *  E5E3C1D4  40404040  01000000  03000000  9957E7E3  A45B6000  E5D44040  40404040  * VTAM    ........r.XTu$-.VM
             *  D3C1E7D9  D5404040  40000000  00000000  00000004  00000001  0C00000E  00060002  * LAXRN    ......................
             *  011E0380  00060202  10000000  27F5C311  5B5F1DC1  13115D6B  1D60C3D7  40D9C5C1  * .............5C.$&lnot;.A..),.-CPREA
             *  C4404040  E2C3C1D9  C5C45A40  401D6011  40404011  C150C595  A3859940  96958540  * D   SCARED!  .-.   .A&En

             *  968640A3  88854086  96939396  A6899587  40839694  94819584  A27A11C2  604011C3  * of the following commands:.B- .C

             *  F0404040  D3D6C7D6  D540A4A2  85998984  40404040  40404040  40404040  404DC5A7  * 0   LOGON userid             (Ex

             *  81949793  857A4040  D3D6C7D6  D540E5D4  E4E2C5D9  F15D11C5  40404040  C4C9C1D3  * ample:  LOGON VMUSER1).E    DIAL

             *  40A4A285  99898440  40404040  40404040  40404040  404DC5A7  81949793  857A4040  *  userid              (Example:

             *  C4C9C1D3  40E5D4E4                                                            * DIAL VMU
```

Figure 67. VTAM buffer, SYSPRINT sample report

VTAM network full buffer trace data, SYSPRINT sample report

```
                                                                    1
          VTAM                                  ADVANCED COMMUNICATIONS FUNCTION
          DATE: mm:dd:yyyy                             TRACE ANALYSIS PROGRAM                                PAGE: 00002
DSJ002I SYSTRACE/SYS008 INPUT FILE OPENED
DSJ004I TRACE FILE PROCESSING BEGINS.....
DSJ220I TRACE FILE RECORDED BY MVS GTF
DSJ223I GTF COMPREHENSIVE TRACE RECORDING MODE    3
DSJ224I GTF TRACE RECORDS ARE TIMESTAMPED
DSJ228I GTF USR OPTION IN EFFECT
DSJ226I GTF RNIO OPTION IN EFFECT
  SOURCE 001    GTS VERSION 001    RELEASE LEVEL SP4.1.0     FMID HBB4410     GRS SYSTEM  SP41D23     CPUID FF17324730900000
 4
DSJ201I GTF RECORD 0000158 LENG(00108) D(12.19.1991) T(17.21.26.170329) AID(FF) FID(FD) EID(EFEF)        VTAM BUFFER
DSJ203I VTAM TRACE 0000001 LENG(00080) D(12.19.1991) T(17.21.26.170128) LRC(00/00)                       VTAM FBUFFER IN   0000000
DSJ203I                    S(NETA    .SSCP1A  ) D(NETA    .APPL1   ) SEGMENT(COMPLETE)
                                                                  14
REC. 0000158 *  006C0000  FFFDA4F8  2211E2AD  9F01EFEF  00F74480  E5E3C1D4  C1D7D7D3  00500020  * .%....U8..S......7..VTAMAPPL.&.. *
             *  0CB00000  A4F82211  E2A10B01  E2E2C3D7  F1C14040  C1D7D7D3  F1404040  D5C5E3C1  * ....u8..S...SSCP1A  APPL1   NETA *
             *  40404040  D5C5E3C1  40404040  40000000  00000000  00000001  00000001  1D000015  *     NETA     .................. *
   12        *  00010007  00066B80  000D02F1                                                     * .......,....1                    *
0000001 BFFR TRACE IN         ORIGIN(SSCP1A  )    DESTINATION(APPL1   )  TIME(17.21.26.170128)  DATE(12.19.1991)
        TH   4000000000000000000000001000000011D000015000100070006        EXP  OSAF OEF(00000001 0001) DSAF DEF(00000001 0015)
    5                          ERN(0) VRN(0) TP PRI(0) VR SEQ(000) TG SEQ(000) SEQ(0007) COUNT(00006)
        RH   6B8000                    SC     DR1                                                FMT          REQ       ACTLU
        RU                SC/NC/DF(0D)   02F1

DSJ201I GTF RECORD 0000159 LENG(00130) D(12.19.1991) T(17.21.26.173758) AID(FF) FID(FD) EID(EFEF)        VTAM BUFFER
DSJ203I VTAM TRACE 0000002 LENG(00102) D(12.19.1991) T(17.21.26.173726) LRC(00/00)                       VTAM FBUFFER OUT  0000001
DSJ203I                    S(NETA    .APPL1   ) D(NETA    .SSCP1A  ) SEGMENT(COMPLETE)
REC. 0000159 *  00820000  FFFDA4F8  2211E383  E601EFEF  00F74480  E5E3C1D4  C1D7D7D3  00660020  * .B....U8..TCW....7..VTAMAPPL.... *
             *  0C300000  A4F82211  E381EB01  C1D7D7D3  F1404040  E2E2C3D7  F1C14040  D5C5E3C1  * ....u8..Ta..APPL1   SSCP1A  NETA *
             *  40404040  D5C5E3C1  40404040  40000000  00000000  00000001  00000001  1D000001  *     NETA     .................. *
             *  00150007  001CEB80  000D01F1  0000C000  000C0F31  00000000  A2000000  00000000  * ...........1............s....... *
             *  0080                                                                            * ..                                 *
0000002 BFFR TRACE OUT        ORIGIN(APPL1   )    DESTINATION(SSCP1A  )  TIME(17.21.26.173726)  DATE(12.19.1991)
        TH   4000000000000000000000001000000011D00000100150007001C        EXP  OSAF OEF(00000001 0015) DSAF DEF(00000001 0001)
                           ERN(0) VRN(0) TP PRI(0) VR SEQ(000) TG SEQ(000) SEQ(0007) COUNT(00028)
        RH   EB8000                    SC     DR1                                                FMT          +RSP      ACTLU
        RU                SC/NC/DF(0D)   01F10000C000000C0F3100000000A2000000000000000080

DSJ201I GTF RECORD 0000160 LENG(00108) D(12.19.1991) T(17.21.41.525568) AID(FF) FID(FD) EID(EFEF)        VTAM BUFFER
DSJ203I VTAM TRACE 0000003 LENG(00080) D(12.19.1991) T(17.21.41.525524) LRC(00/00)                       VTAM FBUFFER IN   0000002
DSJ203I                    S(NETA    .SSCP1A  ) D(NETA    .APPL2   ) SEGMENT(COMPLETE)
REC. 0000160 *  006C0000  FFFDA4F8  22208784  0400EFEF  00F74480  E5E3C1D4  C1D7D7D3  00500020  * .%....U8..GD.....7..VTAMAPPL.&.. *
             *  0CB00000  A4F82220  87814D00  E2E2C3D7  F1C14040  C1D7D7D3  F2404040  D5C5E3C1  * ....u8..ga(.SSCP1A  APPL2   NETA *
             *  40404040  D5C5E3C1  40404040  40000000  00000000  00000001  00000001  1D00001A  *     NETA     .................. *
             *  00010009  00066B80  000D02F1                                                     * .......,....1                    *
0000003 BFFR TRACE IN         ORIGIN(SSCP1A  )    DESTINATION(APPL2   )  TIME(17.21.41.525524)  DATE(12.19.1991)
        TH   4000000000000000000000001000000011D00001A000100090006        EXP  OSAF OEF(00000001 0001) DSAF DEF(00000001 001A)
                           ERN(0) VRN(0) TP PRI(0) VR SEQ(000) TG SEQ(000) SEQ(0009) COUNT(00006)
        RH   6B8000                    SC     DR1                                                FMT          REQ       ACTLU
        RU                SC/NC/DF(0D)   02F1

DSJ201I GTF RECORD 0000161 LENG(00130) D(12.19.1991) T(17.21.41.527024) AID(FF) FID(FD) EID(EFEF)        VTAM BUFFER
DSJ203I VTAM TRACE 0000004 LENG(00102) D(12.19.1991) T(17.21.41.526993) LRC(00/00)                       VTAM FBUFFER OUT  0000003
DSJ203I                    S(NETA    .APPL2   ) D(NETA    .SSCP1A  ) SEGMENT(COMPLETE)
REC. 0000161 *  00820000  FFFDA4F8  222087DF  0300EFEF  00F74480  E5E3C1D4  C1D7D7D3  00660020  * .B....U8..G......7..VTAMAPPL.... *
             *  0C300000  A4F82220  87DD1E00  C1D7D7D3  F2404040  E2E2C3D7  F1C14040  D5C5E3C1  * ....u8..g...APPL2   SSCP1A  NETA *
             *  40404040  D5C5E3C1  40404040  40000000  00000000  00000001  00000001  1D000001  *     NETA     .................. *
             *  001A0009  001CEB80  000D01F1  0000C000  000C0F31  00000000  A2000000  00000000  * ...........1............s....... *
             *  0080                                                                            * ..                                 *
0000004 BFFR TRACE OUT        ORIGIN(APPL2   )    DESTINATION(SSCP1A  )  TIME(17.21.41.526993)  DATE(12.19.1991)
        TH   4000000000000000000000001000000011D000001001A0009001C        EXP  OSAF OEF(00000001 001A) DSAF DEF(00000001 0001)
                           ERN(0) VRN(0) TP PRI(0) VR SEQ(000) TG SEQ(000) SEQ(0009) COUNT(00028)
        RH   EB8000                    SC     DR1                                                FMT          +RSP      ACTLU
        RU                SC/NC/DF(0D)   01F10000C000000C0F3100000000A2000000000000000080
```

Figure 68. VTAM network full buffer trace data, SYSPRINT sample report

X.25 data, SYSPRINT sample report

```
                                                                  1
          VTAM                                  ADVANCED COMMUNICATIONS FUNCTION
          DATE: mm:dd:yyyy                              TRACE ANALYSIS PROGRAM                                PAGE: 00002
DSJ002I SYSTRACE/SYS008 INPUT FILE OPENED
DSJ004I TRACE FILE PROCESSING BEGINS.....
DSJ220I TRACE FILE RECORDED BY MVS GTF
DSJ223I GTF COMPREHENSIVE TRACE RECORDING MODE
DSJ223I GTF COMPREHENSIVE TRACE RECORDING MODE     3
DSJ224I GTF TRACE RECORDS ARE TIMESTAMPED
DSJ228I GTF USR OPTION IN EFFECT
DSJ226I GTF RNIO OPTION IN EFFECT
 4
DSJ201I GTF RECORD 0000008 LENG(00151) D(06.02.1991) T(07.16.37.299041) AID(FF) FID(FD) EID(EFE4)        NCP TRACE
DSJ203I VTAM TRACE 0000007 LENG(00123) D(06.02.1991) T(07.16.37.287724) LRC(00/00) L(TL07    )           NCP TRACE    IN   0000000
DSJ204I LINE TRACE 0000008 TYPE(89) LINE(0024) FULL DUPLEX X.25  PRIMARY   RECEIVE  TIME(FB) EP(D7) STATUS(81)             0000000
                                                   14
REC. 0000008 *  00970000  FFFD9E9B  6B9934F6  1600EFE4  00FE8DF8  D5C5E340  40404040  007B0000  * .p......,r.6...U...8NET     .#..
             *  08A00000  9E9B6B99  3232C200  E3D3F0F7  40404040  00000000  00000000  01038300  * ......,r..B.TL07    ..........c.
             *  2489FBD7  81000CD7  0010D800  08000006  0A77E800  00000000  000000E2  00100144  * .i.Pa..P..Q.......Y........S....
             *  13000006  0A77E801  1F000000  000003D7  0010D801  08000006  0A77E800  00000000  * ......Y........P..Q.......Y.....
             *  000000E2  00100144  13000006  0A77E801  73000000  000005                        * ...S..........Y........

DSJ201I GTF RECORD 0000009 LENG(00280) D(06.02.1991) T(07.16.37.311985) AID(FF) FID(FD) EID(EFE4)        NCP TRACE
DSJ203I VTAM TRACE 0000008 LENG(00252) D(06.02.1991) T(07.16.37.309969) LRC(00/00) L(TL07    )           NCP TRACE    IN   0000000
DSJ204I LINE TRACE 0000009 TYPE(89) LINE(0024) FULL DUPLEX X.25  PRIMARY   TRANSMIT TIME(FB) EP(D7) STATUS(C1)             0000004
REC. 0000009 *  01180000  FFFD9E9B  6B99381F  1600EFE4  00FE8DF8  D5C5E340  40404040  00FC0000  * ........,r.....U...8NET     ....
             *  08A00000  9E9B6B99  37A11400  E3D3F0F7  40404040  00000000  00000000  01038300  * ......,r....TL07    ..........c.
             *  2489FBD7  C1000CD7  00104A00  80000010  0A791808  B808BC00  000000E2  00100144  * .i.PA..P..¢................S....
             *  01000090  00D70300  00000000  000000D7  00104B01  00000010  0A791808  B808BC00  * .....P.........P................
             *  000000E2  00100144  02009E90  00D79300  00000000  000001D7  0010D702  08000010  * ...S.........Pl........P..P.....
             *  0A791801  5308BC00  000000E2  00100144  10000090  00D79300  00000000  000002D7  * ...........S.........Pl........P
             *  0010D803  08000010  0A791801  3F08BC00  000000E2  00100144  10000090  00D79300  * ..Q................S.........Pl.
             *  00000000  000004D7  0010D904  082F0005  0C918001  0008BC00  000000E2  00100146  * .......P..R......j.........S....
             *  11000090  00D79300  00000000  000006E7  00050010  00FB0000                        * .....Pl........X........
DSJ201I GTF RECORD 0000010 LENG(00284) D(06.02.1991) T(07.17.02.790181) AID(FF) FID(FD) EID(EFE4)        NCP TRACE
DSJ203I VTAM TRACE 0000009 LENG(00256) D(06.02.1991) T(07.17.02.787157) LRC(00/00) L(TL07    )           NCP TRACE    IN   0000000
DSJ204I LINE TRACE 0000010 TYPE(89) LINE(0024) FULL DUPLEX X.25  PRIMARY   RECEIVE  TIME(FA) EP(D7) STATUS(81)             0000015
REC. 0000010 *  011C0000  FFFD9E9B  6BB18462  5A00EFE4  00FE8DF8  D5C5E340  40404040  01000000  * ........,.d.!..U...8NET     ....
             *  08A00000  9E9B6BB1  83A55800  E3D3F0F7  40404040  00000000  00000000  01038300  * ......,.cv..TL07    ..........c.
             *  2489FAD7  81000CD7  0010D902  08000006  0A77E800  00000000  000000E2  00100144  * .i.Pa..P..R.......Y........S....
             *  13000006  0A77E801  21000000  000007D7  0010B403  08000006  0A77E800  00000000  * ......Y........P..........Y.....
             *  000000E2  00100144  13000006  0A77E803  2F000000  000008D7  0010B604  08000006  * ...S..........Y........P........
             *  0A77E800  00000000  000000E2  00100144  13000006  0A77E801  21000000  00000BD7  * ..Y........S..........Y........P
             *  0010B605  08300006  0CA88C00  00000000  000000E2  0010014C  13000001  0CA88C03  * .........y........S...<.....y..
             *  20000000  00000CD9  00050010  00FB0733  D70010B8  06083000  060CAA1C  00000000  * .......R........P...............
             *  00000000  E2001001  4C130000  010CAA1C  03220000  0000000E  D9000500            * ....S...<...............R...
DSJ201I GTF RECORD 0000011 LENG(00076) D(06.02.1991) T(07.17.02.796830) AID(FF) FID(FD) EID(EFE4)        NCP TRACE
DSJ203I VTAM TRACE 0000010 LENG(00048) D(06.02.1991) T(07.17.02.794837) LRC(00/00) L(TL07    )           NCP TRACE    IN   0000000
DSJ204I LINE TRACE 0000011 TYPE(89) LINE(0024) FULL DUPLEX X.25  PRIMARY   RECEIVE  TIME(FA) EP(D7) STATUS(81)             0000026
REC. 0000011 *  004C0000  FFFD9E9B  6BB18601  E600EFE4  00FE8DF8  D5C5E340  40404040  00300000  * .<......,.f.W..U...8NET     ....
             *  08800000  9E9B6BB1  85855800  E3D3F0F7  40404040  00000000  00000000  01038300  * ......,.ee..TL07    ..........c.
             *  2489FAD7  81000C10  00FB0733
```

Figure 69. X.25 data, SYSPRINT sample report

VTAM internal trace report

The selection parameter is VTPRT.

For additional information about the contents of the VTAM internal trace report, see z/OS Communications Server: SNA Diagnosis Vol 2, FFST Dumps and the VIT for the level of VTAM you are using.

Figure 70 on page 243 shows a sample report.

Table 39 on page 242 describes the column headers and the trace data contained in this report type. To locate this information about the sample reports, reference the numbers (n) listed in this table to the corresponding numbers (n) shown in the sample reports.

Table 39. VTAM internal trace report description

Reference number (n)	Report column headers and the trace data
1	The page heading contains the report name, report parameter, and the date the report was printed or displayed. This 3-line header appears on the first page only; the following pages have the header VTAM INTERNAL TRACE REPORT.
2	This is the trace record time stamp. Its value is within the limits specified by the STIME/ETIME parameters.
3	VIT trace entry.
4	Four-character VIT record ID and EBCDIC translation of record.

```
                                                                  1
          VTAM                                        ADVANCED COMMUNICATIONS FUNCTION
                                                            TRACE ANALYSIS PROGRAM
        DATE: mm:dd:yyyy                               VTAM INTERNAL TRACE REPORT (VTPRT)                          PAGE: 00001

       2                                                3                                                                  4
 17.53.26.160638  D4E2C740 230B7DFA F3F1F5C9 000B7EEE  D9C1E3C9 C5E7E3F0 F0F0C1D7 C940E2D4  *  MSG ..'.315I..=.RATIEXT000API SM  *
 17.53.26.206962  D7D6E2E3 23A1C91E 00000000 00000000  00000000 00000000 FFFFFFFC 8088B010  *  POST..I......................h..  *
 17.53.26.264562  E5E3C1D3 23A0FBB6 0009C4D0 000000E6  00000178 00000000 00000000 00000000  *  VTAL......D....W...............  *
 17.53.26.392772  E5E3C1D3 23A0FBF2 00025750 000000F3  0000013F 00000000 00000000 00000000  *  VTAL...2...&...3...............  *
 17.53.26.484867  D8E4C540 23A0FEA0 49852008 10843C98  00025750 00000000 C3C6C6C5 04849C08  *  QUE .....e...d.q...&....CFFE.d..  *
 17.53.26.542012  C1C4E2D7 23852008 80000000 00843C98  80000000 00000000 00020003 00600000  *  ADSP.e.......d.q............-..  *
 17.53.26.581271  C4C9E2D7 23852008 49025750 10843C98  80025750 80000000 C3C6C6C5 04849C08  *  DISP.e.....&.d.q...&....CFFE.d..  *
 17.53.26.597405  D8E4C540 2300CDE8 49852008 10843CB8  80025750 80000000 C3C6D9F2 B084E408  *  QUE ...Y.e...d.....&....CFR2.dU.  *
 17.53.26.620022  D3D2C5E7 23A04E7C 00852008 00000000  00843CCC 00000100 00000000 00849C08  *  LKEX..+@.e.......d...........d..  *
 17.53.26.634690  E4D5D3D2 23A04FD4 00852008 00000100  00843CCC 00000100 01000001 00849C08  *  UNLK..|M.e.......d...........d..  *
 17.53.26.649306  D7D6E2E3 2300CE10 00852008 00843CB8  00000000 00000000 00843890 0084E408  *  POST.....e...d...........d...dU.  *
 17.53.26.676388  C5E7C9E3 2300CF3A 04852008 00843C98  80000000 80000000 10843C0C 00849C08  *  EXIT.....e...d.q........d...d..  *
 17.53.26.691017  C1E7C9E3 23852008 00000000 00000000  8084E408 00000000 00020003 00600000  *  AXIT.e...........dU..........-..  *
 17.53.26.729999  E5E3C6D9 23A100BE 0009C4D0 000000E6  00000178 00000000 00000000 00000000  *  VTFR......D....W...............  *
 17.53.26.759199  E5E3C6D9 230218C0 000F3720 000000E5  00000164 00000000 00000000 00000000  *  VTFR...........V...............  *
 17.53.26.860880  C5E7C9E3 230B75BE 04852008 00843578  80000000 80000000 108437F4 0084E808  *  EXIT.....e...d...........d.4.dY.  *
 17.53.26.888993  D9C5D3E2 23A04720 97852008 0084E808  008531F8 01680020 00000000 00000000  *  RELS....pe...dY..e.8...........  *
 17.53.26.903724  D9C5E2D4 23852008 00000000 10843CB8  80025750 80000000 00843890 B084E408  *  RESM.e.......d.....&.....d...dU.  *
 17.53.26.946095  D3D2C5E7 23026C9A 00852008 00000000  00843CCC 00000100 00000000 0084E408  *  LKEX..%..e.......d...........dU.  *
 17.53.26.973076  E4D5D3D2 23026D08 00852008 00000100  00843CCC 00000100 01000001 0084E408  *  UNLK.._..e.......d...........dU.  *
 17.53.27.059143  E5E3C1D3 2303203E 0009AEB8 000000E6  000000B4 00000000 00000000 00000000  *  VTAL...........W...............  *
 17.53.27.106995  E5E3C6D9 23032130 0009AEB8 000000E6  000000B4 00000000 00000000 00000000  *  VTFR...........W...............  *
 17.53.27.412359  E5E3C6D9 23027A58 00025750 000000F3  0000013F 00000000 00000000 00000000  *  VTFR..:...&...3................  *
 17.53.27.521828  D3D2C5E7 23026C9A 00852008 00000000  00843CCC 00000100 00000000 0084E408  *  LKEX..%..e.......d...........dU.  *
 17.53.27.570581  E4D5D3D2 23026D08 00852008 00000100  00843CCC 00000100 01000001 0084E408  *  UNLK.._..e.......d...........dU.  *
 17.53.27.602715  E6C1C9E3 23026308 00852008 00843CB8  80000000 80000000 10843890 0084E408  *  WAIT.....e...d...........d...dU.  *
 17.53.27.719045  C1E7C9E3 23852008 00000000 00000000  00000000 00000000 00020003 00600000  *  AXIT.e.......................-..  *
 17.53.28.012002  E2C3C8C4 2301FFB0 00852008 10843598  00000000 00000000 008437AC 28000000  *  SCHD.....e...d.q........d......  *
```

Figure 70. VTAM internal trace sample report

X.25 line trace report

The selection parameter is NPPRT.

Figure 71 on page 244 shows a sample report.

Table 40 on page 243 describes the column headers and the trace data contained in this report type. To locate this information about the sample reports, reference the numbers (n) listed in this table to the corresponding numbers (n) shown in the sample reports.

Table 40. X.25 line trace report description

Reference number (n)	Report column headers and the trace data
1	The page heading contains the report name, report parameter, and the date the report was printed or displayed.
2	**RECORD NUMBER** A cross-reference to the data in the line trace detail report.
3	**DIR** Direction of data. **IN** Receive data. **OUT** Transmit data.
4	**T** The relative elapsed time (in hexadecimal) between the entries to the nearest 100 milliseconds. The time is measured from trace activation to the level 2 interrupt that is represented by each entry.
5	**LCN** The logical channel number.
6	The address byte and the 1- or 2-byte control field of the frame header (FH).

Table 40. X.25 line trace report description (continued)	
Reference number (n)	**Report column headers and the trace data**
7	Frame header (FH) control field. Frame type Command or response specified: I, RR, RNR, REJ, or other commands or responses. **NR** Receive-sequence number (for I and S frames). **P** Poll or final bit. **NS** Send-sequence number (for I frames only).
8	**PH (Packet Header)** The 3 or 4 bytes of the PH. There are 3 bytes for Modulo 8, and 4 bytes for Modulo 128.
9	Analysis of the PH. For example, data, call-connected clear indication. **PR** Packet-receive sequence number. **M** More data bit (MDB). **PS** Packet-send sequence number.
10	**TIME** The time stamp of the trace record.

```
                                                                  1
          VTAM                                   ADVANCED COMMUNICATIONS FUNCTION
                                                       TRACE ANALYSIS PROGRAM
          DATE: mm:dd:yyyy                          X.25 LINE TRACE REPORT (NPPRT)                        PAGE: 00001

                   :
  2
RECORD    3    4   5        6                    7                  8                     9                          10
NUMBER   DIR  T   LCN  ------------|-------------------------|-------------|-------------------------------|--------------------|
-----    ---  --  ---
000008   IN   D8  ***  A,C(01,1F  ) DM           P/F=1                                                          TIME(07.16.37.287724)
000008   IN   D8  ***  A,C(01,73  ) UA           P/F=1                                                          TIME(07.16.37.287724)
000009   OUT  D7  ***  A,C(01,53  ) DISC         P/F=1                                                          TIME(07.16.37.309969)
000009   OUT  D8  ***  A,C(01,3F  ) SABM         P/F=1                                                          TIME(07.16.37.309969)
000009   OUT  D9  000  A,C(01,00  ) INFO  NR=000 P/F=0 NS=000  PH(1000FB  ) RESTART      PR=    M=  PS=      TIME(07.16.37.309969)
                  0000                                                                          *..                                  *
000010   IN   D9  ***  A,C(01,21  ) RR    NR=001 P/F=0                                                           TIME(07.17.02.787157)
000010   IN   B4  ***  A,C(03,2F  ) SABM         P/F=0                                                          TIME(07.17.02.787157)
000010   IN   B6  ***  A,C(01,21  ) RR    NR=001 P/F=0                                                           TIME(07.17.02.787157)
000010   IN   B6  000  A,C(03,20  ) INFO  NR=001 P/F=0 NS=000  PH(1000FB  ) RESTART      PR=    M=  PS=      TIME(07.17.02.787157)
                  0733                                                                          *..                                  *
000011   IN   B8  000  A,C(03,22  ) INFO  NR=001 P/F=0 NS=001  PH(1000FB  ) RESTART      PR=    M=  PS=      TIME(07.17.02.794837)
                  0733                                                                          *..                                  *
000012   OUT  B4  ***  A,C(03,63  ) UA           P/F=0                                                          TIME(07.17.02.798491)
000012   OUT  B6  000  A,C(01,00  ) INFO  NR=000 P/F=0 NS=000  PH(1000FB  ) RESTART      PR=    M=  PS=      TIME(07.17.02.798491)
                  0000                                                                          *..                                  *
000013   IN   18  ***  A,C(01,41  ) RR    NR=002 P/F=0                                                           TIME(07.17.28.276501)
000014   OUT  B7  ***  A,C(03,21  ) RR    NR=001 P/F=0                                                           TIME(07.17.28.282225)
000014   OUT  B8  ***  A,C(03,41  ) RR    NR=002 P/F=0                                                           TIME(07.17.28.282225)
000014   OUT  18  000  A,C(01,42  ) INFO  NR=002 P/F=0 NS=001  PH(1000FF  ) RESTART-CONF PR=    M=  PS=      TIME(07.17.28.282225)
000017   IN   27  ***  A,C(01,41  ) RR    NR=002 P/F=0                                                           TIME(07.18.19.299486)
000021   IN   A0  ***  A,C(01,1F  ) DM           P/F=1                                                          TIME(07.19.10.291923)
```

Figure 71. X.25 line trace sample report

Appendix C. Accessibility

Accessible publications for this product are offered through IBM Documentation for z/OS.

If you experience difficulty with the accessibility of any z/OS documentation see How to Send Feedback to IBM to leave documentation feedback.

© Copyright IBM Corp. 2000, 2025

Notices

This information was developed for products and services that are offered in the USA or elsewhere.

IBM may not offer the products, services, or features discussed in this document in other countries. Consult your local IBM representative for information on the products and services currently available in your area. Any reference to an IBM product, program, or service is not intended to state or imply that only that IBM product, program, or service may be used. Any functionally equivalent product, program, or service that does not infringe any IBM intellectual property right may be used instead. However, it is the user's responsibility to evaluate and verify the operation of any non-IBM product, program, or service.

IBM may have patents or pending patent applications covering subject matter described in this document. The furnishing of this document does not grant you any license to these patents. You can send license inquiries, in writing, to:

IBM Director of Licensing IBM Corporation North Castle Drive, MD-NC119 Armonk, NY 10504-1785 United States of America

For license inquiries regarding double-byte character set (DBCS) information, contact the IBM Intellectual Property Department in your country or send inquiries, in writing, to:

Intellectual Property Licensing Legal and Intellectual Property Law IBM Japan Ltd. 19-21, Nihonbashi-Hakozakicho, Chuo-ku Tokyo 103-8510, Japan

The following paragraph does not apply to the United Kingdom or any other country where such provisions are inconsistent with local law: INTERNATIONAL BUSINESS MACHINES CORPORATION PROVIDES THIS PUBLICATION "AS IS" WITHOUT WARRANTY OF ANY KIND, EITHER EXPRESS OR IMPLIED, INCLUDING, BUT NOT LIMITED TO, THE IMPLIED WARRANTIES OF NON-INFRINGEMENT, MERCHANTABILITY OR FITNESS FOR A PARTICULAR PURPOSE. Some states do not allow disclaimer of express or implied warranties in certain transactions, therefore, this statement may not apply to you.

This information could include technical inaccuracies or typographical errors. Changes are periodically made to the information herein; these changes will be incorporated in new editions of the publication. IBM may make improvements and/or changes in the product(s) and/or the program(s) described in this publication at any time without notice.

This information could include missing, incorrect, or broken hyperlinks. Hyperlinks are maintained in only the HTML plug-in output for the IBM Documentation. Use of hyperlinks in other output formats of this information is at your own risk.

Any references in this information to non-IBM websites are provided for convenience only and do not in any manner serve as an endorsement of those websites. The materials at those websites are not part of the materials for this IBM product and use of those websites is at your own risk.

IBM may use or distribute any of the information you supply in any way it believes appropriate without incurring any obligation to you.

Licensees of this program who wish to have information about it for the purpose of enabling: (i) the exchange of information between independently created programs and other programs (including this one) and (ii) the mutual use of the information which has been exchanged, should contact:

IBM Corporation Site Counsel 2455 South Road Poughkeepsie, NY 12601-5400 USA

Such information may be available, subject to appropriate terms and conditions, including in some cases, payment of a fee.

The licensed program described in this document and all licensed material available for it are provided by IBM under terms of the IBM Customer Agreement, IBM International Program License Agreement or any equivalent agreement between us.

© Copyright IBM Corp. 2000, 2025

Any performance data contained herein was determined in a controlled environment. Therefore, the results obtained in other operating environments may vary significantly. Some measurements may have been made on development-level systems and there is no guarantee that these measurements will be the same on generally available systems. Furthermore, some measurements may have been estimated through extrapolation. Actual results may vary. Users of this document should verify the applicable data for their specific environment.

Information concerning non-IBM products was obtained from the suppliers of those products, their published announcements or other publicly available sources. IBM has not tested those products and cannot confirm the accuracy of performance, compatibility or any other claims related to non-IBM products. Questions on the capabilities of non-IBM products should be addressed to the suppliers of those products.

All statements regarding IBM's future direction or intent are subject to change or withdrawal without notice, and represent goals and objectives only.

This information contains examples of data and reports used in daily business operations. To illustrate them as completely as possible, the examples include the names of individuals, companies, brands, and products. All of these names are fictitious and any similarity to the names and addresses used by an actual business enterprise is entirely coincidental.

COPYRIGHT LICENSE:

This information contains sample application programs in source language, which illustrate programming techniques on various operating platforms. You may copy, modify, and distribute these sample programs in any form without payment to IBM, for the purposes of developing, using, marketing or distributing application programs conforming to the application programming interface for the operating platform for which the sample programs are written. These examples have not been thoroughly tested under all conditions. IBM, therefore, cannot guarantee or imply reliability, serviceability, or function of these programs. The sample programs are provided "AS IS", without warranty of any kind. IBM shall not be liable for any damages arising out of your use of the sample programs.

Terms and conditions for product documentation

Permissions for the use of these publications are granted subject to the following terms and conditions.

Applicability

These terms and conditions are in addition to any terms of use for the IBM website.

Personal use

You may reproduce these publications for your personal, noncommercial use provided that all proprietary notices are preserved. You may not distribute, display or make derivative work of these publications, or any portion thereof, without the express consent of IBM.

Commercial use

You may reproduce, distribute and display these publications solely within your enterprise provided that all proprietary notices are preserved. You may not make derivative works of these publications, or reproduce, distribute or display these publications or any portion thereof outside your enterprise, without the express consent of IBM.

Rights

Except as expressly granted in this permission, no other permissions, licenses or rights are granted, either express or implied, to the publications or any information, data, software or other intellectual property contained therein.

IBM reserves the right to withdraw the permissions granted herein whenever, in its discretion, the use of the publications is detrimental to its interest or, as determined by IBM, the above instructions are not being properly followed.

You may not download, export or re-export this information except in full compliance with all applicable laws and regulations, including all United States export laws and regulations.

IBM MAKES NO GUARANTEE ABOUT THE CONTENT OF THESE PUBLICATIONS. THE PUBLICATIONS ARE PROVIDED "AS-IS" AND WITHOUT WARRANTY OF ANY KIND, EITHER EXPRESSED OR IMPLIED, INCLUDING BUT NOT LIMITED TO IMPLIED WARRANTIES OF MERCHANTABILITY, NON-INFRINGEMENT, AND FITNESS FOR A PARTICULAR PURPOSE.

IBM Online Privacy Statement

IBM Software products, including software as a service solutions, ("Software Offerings") may use cookies or other technologies to collect product usage information, to help improve the end user experience, to tailor interactions with the end user, or for other purposes. In many cases no personally identifiable information is collected by the Software Offerings. Some of our Software Offerings can help enable you to collect personally identifiable information. If this Software Offering uses cookies to collect personally identifiable information, specific information about this offering's use of cookies is set forth below.

Depending upon the configurations deployed, this Software Offering may use session cookies that collect each user's name, email address, phone number, or other personally identifiable information for purposes of enhanced user usability and single sign-on configuration. These cookies can be disabled, but disabling them will also eliminate the functionality they enable.

If the configurations deployed for this Software Offering provide you as customer the ability to collect personally identifiable information from end users via cookies and other technologies, you should seek your own legal advice about any laws applicable to such data collection, including any requirements for notice and consent.

For more information about the use of various technologies, including cookies, for these purposes, see IBM's Privacy Policy at ibm.com®/privacy and IBM's Online Privacy Statement at ibm.com/privacy/details in the section entitled "Cookies, Web Beacons and Other Technologies," and the "IBM Software Products and Software-as-a-Service Privacy Statement" at ibm.com/software/info/product-privacy.

Policy for unsupported hardware

Various z/OS elements, such as DFSMS, JES2, JES3, and MVS, contain code that supports specific hardware servers or devices. In some cases, this device-related element support remains in the product even after the hardware devices pass their announced End of Service date. z/OS may continue to service element code; however, it will not provide service related to unsupported hardware devices. Software problems related to these devices will not be accepted for service, and current service activity will cease if a problem is determined to be associated with out-of-support devices. In such cases, fixes will not be issued.

Minimum supported hardware

The minimum supported hardware for z/OS releases identified in z/OS announcements can subsequently change when service for particular servers or devices is withdrawn. Likewise, the levels of other software products supported on a particular release of z/OS are subject to the service support lifecycle of those products. Therefore, z/OS and its product publications (for example, panels, samples, messages, and product documentation) can include references to hardware and software that is no longer supported.

- For information about software support lifecycle, see: IBM Lifecycle Support for z/OS (www.ibm.com/software/support/systemsz/lifecycle)
- For information about currently-supported IBM hardware, contact your IBM representative.

Policy for unsupported hardware

Various z/OS elements, such as DFSMS, HCD, JES2, JES3, and MVS, contain code that supports specific hardware servers or devices. In some cases, this device-related element support remains in the product even after the hardware devices pass their announced End of Service date. z/OS may continue to service element code; however, it will not provide service related to unsupported hardware devices. Software problems related to these devices will not be accepted for service, and current service activity will cease if a problem is determined to be associated with out-of-support devices. In such cases, fixes will not be issued.

Trademarks

IBM, the IBM logo, and ibm.com are trademarks or registered trademarks of International Business Machines Corp., registered in many jurisdictions worldwide. Other product and service names might be trademarks of IBM or other companies. A current list of IBM trademarks is available on the web at Copyright and trademark information at www.ibm.com/legal/copytrade.shtml.

Bibliography

This bibliography contains descriptions of the documents in the z/OS Communications Server library.

z/OS Communications Server documentation is available online at the z/OS Internet Library web page at http://www.ibm.com/systems/z/os/zos/library/bkserv/.

z/OS Communications Server library updates

Updates to documents are also available on RETAIN and in information APARs (info APARs). Go to https://www.ibm.com/mysupport to view information APARs.

- z/OS Communications Server V2R1 New Function APAR Summary
- z/OS Communications Server V2R2 New Function APAR Summary
- z/OS Communications Server V2R3 New Function APAR Summary
- z/OS Communications Server V2R4 New Function APAR Summary

z/OS Communications Server information

z/OS Communications Server product information is grouped by task in the following tables.

Planning

Title	Number	Description
z/OS Communications Server: New Function Summary	GC27-3664	This document is intended to help you plan for new IP or SNA functions, whether you are migrating from a previous version or installing z/OS for the first time. It summarizes what is new in the release and identifies the suggested and required modifications needed to use the enhanced functions.
z/OS Communications Server: IPv6 Network and Appl Design Guide	SC27-3663	This document is a high-level introduction to IPv6. It describes concepts of z/OS Communications Server's support of IPv6, coexistence with IPv4, and migration issues.

Resource definition, configuration, and tuning

Title	Number	Description
z/OS Communications Server: IP Configuration Guide	SC27-3650	This document describes the major concepts involved in understanding and configuring an IP network. Familiarity with the z/OS operating system, IP protocols, z/OS UNIX System Services, and IBM Time Sharing Option (TSO) is recommended. Use this document with the z/OS Communications Server: IP Configuration Reference.

© Copyright IBM Corp. 2000, 2025

Title	Number	Description
z/OS Communications Server: IP Configuration Reference	SC27-3651	This document presents information for people who want to administer and maintain IP. Use this document with the z/OS Communications Server: IP Configuration Guide. The information in this document includes: • TCP/IP configuration data sets • Configuration statements • Translation tables • Protocol number and port assignments
z/OS Communications Server: SNA Network Implementation Guide	SC27-3672	This document presents the major concepts involved in implementing an SNA network. Use this document with the z/OS Communications Server: SNA Resource Definition Reference.
z/OS Communications Server: SNA Resource Definition Reference	SC27-3675	This document describes each SNA definition statement, start option, and macroinstruction for user tables. It also describes NCP definition statements that affect SNA. Use this document with the z/OS Communications Server: SNA Network Implementation Guide.
z/OS Communications Server: SNA Resource Definition Samples	SC27-3676	This document contains sample definitions to help you implement SNA functions in your networks, and includes sample major node definitions.
z/OS Communications Server: IP Network Print Facility	SC27-3658	This document is for systems programmers and network administrators who need to prepare their network to route SNA, JES2, or JES3 printer output to remote printers using TCP/IP Services.

Operation

Title	Number	Description
z/OS Communications Server: IP User's Guide and Commands	SC27-3662	This document describes how to use TCP/IP applications. It contains requests with which a user can log on to a remote host using Telnet, transfer data sets using FTP, send electronic mail, print on remote printers, and authenticate network users.
z/OS Communications Server: IP System Administrator's Commands	SC27-3661	This document describes the functions and commands helpful in configuring or monitoring your system. It contains system administrator's commands, such as TSO NETSTAT, PING, TRACERTE and their UNIX counterparts. It also includes TSO and MVS commands commonly used during the IP configuration process.
z/OS Communications Server: SNA Operation	SC27-3673	This document serves as a reference for programmers and operators requiring detailed information about specific operator commands.
z/OS Communications Server: Quick Reference	SC27-3665	This document contains essential information about SNA and IP commands.

Customization

Title	Number	Description
z/OS Communications Server: SNA Customization	SC27-3666	This document enables you to customize SNA, and includes the following information: • Communication network management (CNM) routing table • Logon-interpret routine requirements • Logon manager installation-wide exit routine for the CLU search exit • TSO/SNA installation-wide exit routines • SNA installation-wide exit routines

Writing application programs

Title	Number	Description
z/OS Communications Server: IP Sockets Application Programming Interface Guide and Reference	SC27-3660	This document describes the syntax and semantics of program source code necessary to write your own application programming interface (API) into TCP/IP. You can use this interface as the communication base for writing your own client or server application. You can also use this document to adapt your existing applications to communicate with each other using sockets over TCP/IP.
z/OS Communications Server: IP CICS Sockets Guide	SC27-3649	This document is for programmers who want to set up, write application programs for, and diagnose problems with the socket interface for CICS® using z/OS TCP/IP.
z/OS Communications Server: IP IMS Sockets Guide	SC27-3653	This document is for programmers who want application programs that use the IMS TCP/IP application development services provided by the TCP/IP Services of IBM.
z/OS Communications Server: IP Programmer's Guide and Reference	SC27-3659	This document describes the syntax and semantics of a set of high-level application functions that you can use to program your own applications in a TCP/IP environment. These functions provide support for application facilities, such as user authentication, distributed databases, distributed processing, network management, and device sharing. Familiarity with the z/OS operating system, TCP/IP protocols, and IBM Time Sharing Option (TSO) is recommended.
z/OS Communications Server: SNA Programming	SC27-3674	This document describes how to use SNA macroinstructions to send data to and receive data from (1) a terminal in either the same or a different domain, or (2) another application program in either the same or a different domain.
z/OS Communications Server: SNA Programmer's LU 6.2 Guide	SC27-3669	This document describes how to use the SNA LU 6.2 application programming interface for host application programs. This document applies to programs that use only LU 6.2 sessions or that use LU 6.2 sessions along with other session types. (Only LU 6.2 sessions are covered in this document.)
z/OS Communications Server: SNA Programmer's LU 6.2 Reference	SC27-3670	This document provides reference material for the SNA LU 6.2 programming interface for host application programs.

Title	Number	Description
z/OS Communications Server: CSM Guide	SC27-3647	This document describes how applications use the communications storage manager.

Diagnosis

Title	Number	Description
z/OS Communications Server: IP Diagnosis Guide	GC27-3652	This document explains how to diagnose TCP/IP problems and how to determine whether a specific problem is in the TCP/IP product code. It explains how to gather information for and describe problems to the IBM Software Support Center.
z/OS Communications Server: ACF/TAP Trace Analysis Handbook	GC27-3645	This document explains how to gather the trace data that is collected and stored in the host processor. It also explains how to use the Advanced Communications Function/Trace Analysis Program (ACF/TAP) service aid to produce reports for analyzing the trace data information.
z/OS Communications Server: SNA Diagnosis Vol 1, Techniques and Procedures and z/OS Communications Server: SNA Diagnosis Vol 2, FFST Dumps and the VIT	GC27-3667 GC27-3668	These documents help you identify an SNA problem, classify it, and collect information about it before you call the IBM Support Center. The information collected includes traces, dumps, and other problem documentation.
z/OS Communications Server: SNA Data Areas Volume 1 and z/OS Communications Server: SNA Data Areas Volume 2	GC31-6852 GC31-6853	These documents describe SNA data areas and can be used to read an SNA dump. They are intended for IBM programming service representatives and customer personnel who are diagnosing problems with SNA.

Messages and codes

Title	Number	Description
z/OS Communications Server: SNA Messages	SC27-3671	This document describes the ELM, IKT, IST, IUT, IVT, and USS messages. Other information in this document includes: • Command and RU types in SNA messages • Node and ID types in SNA messages • Supplemental message-related information
z/OS Communications Server: IP Messages Volume 1 (EZA)	SC27-3654	This volume contains TCP/IP messages beginning with EZA.
z/OS Communications Server: IP Messages Volume 2 (EZB, EZD)	SC27-3655	This volume contains TCP/IP messages beginning with EZB or EZD.
z/OS Communications Server: IP Messages Volume 3 (EZY)	SC27-3656	This volume contains TCP/IP messages beginning with EZY.
z/OS Communications Server: IP Messages Volume 4 (EZZ, SNM)	SC27-3657	This volume contains TCP/IP messages beginning with EZZ and SNM.
z/OS Communications Server: IP and SNA Codes	SC27-3648	This document describes codes and other information that appear in z/OS Communications Server messages.

Index

Numerics

3746 Model 900
    parameter descriptions 32
    parameters 31

A

accessibility
    contact IBM 245
ACF/TAP
    commands 17
    control parameters 30
    parameter conventions 21
    parameters 21
    running 17
    starting and running 17
ACF/TAP data
    overview 1
ACF/TAP sample reports
    CSS adapter trace reports 168
    overview 167
    reporting data using record numbers 167
adapter trace reports, CSS 168
assistive technologies 245

B

BFFRNODE parameter (buffer trace data) 47
buffer lease verification 13
buffer trace data, BFFRNODE 47

C

CAPRT 22
CHARCODE
    parameters 34
commands 19
communications line adapter PIU data sample report 173
communications line adapter PIU data SNA detail sample report 214
Communications Server for z/OS, online information xx
contact
    z/OS 245
control parameters
    3746 Model 900 31
    ACF/TAP 30
    CHARCODE 34
    CSATYPE 35
    DLCI 40
    INDEX 41
    INPUT 41
    LCN 43
    LINECNT 43
    LLN 43
    LOGADDR 44
control parameters *(continued)*
    LONGPIU 44
    NCPNAME 45
conversation index 3
conversation report 3
CSATYPE
    parameters 35
CSP data
    line trace summary sample report 206
CSPRT 23
CSS
    adapter trace reports 168
    CSS adapter trace report (CAPRT) 22
    CSS line trace report (CSPRT) 23
    description for adapter trace reports 168–173
    line trace report description 179–181
    line trace report overview 179
    line trace sample report 181
CSS adapter trace 15, 16
CSS adapter with ECB flag, sample report 175
CSS line trace 8
CTLRNODE parameter (NETCTLR trace data) 47

D

DLCI
    parameters 40
DNS, online information xxi
DTPRT
    network data traffic report 26
DUMP parameter 28
duplex lines, NCP-collected line trace data 4

E

END parameters 51
ESCON data, CSS adapter trace sample report 175
ESS
    data, SYSPRINT sample report 234
    line data, line trace summary 206
ESS line trace, line trace detail sample report 196

F

FMH5, SNA detail sample report 216
frame-relay
    data, SNA detail sample report 215
    data, SNA summary sample report 227
    data, SYSPRINT sample report 235
    frame-relay physical with BNN HPR data, line trace detail sample report 199
    logical data, line trace detail sample report 197
    over token-ring data, line trace detail sample report 200
    physical data, line trace detail sample report 198
    physical data, line trace summary sample report 207

frame-relay *(continued)*
physical with BNN data, line trace detail sample report 198
physical with BNN HPR data, line trace summary sample report 208
with BNN HPR data, SNA detail sample report 216
with BNN HPR data, SNA summary 227
frame-relay data, CSS adapter trace sample report 177
frame-relay logical line trace summary report
report description 182
Frame-relay logical line trace summary report
overview 181
frame-relay logical line trace summary sample report 183
frame-relay over token-ring data
LAN line trace sample report 190
FRPRT
frame-relay logical line trace summary report 23

G

generalized path information, unit trace 13
GPT
index report 23
index report description 183, 184
index report overview 183
index sample report 185
summary report 24
summary report description 185, 186
summary report overview 185
summary report sample 187
trace data 47
GPT data
ACP/TAP restrictions 3
supported by ACP/TAP 2
GPTNODE parameter (GPT trace data) 47
GSPRT
GPT summary report 24

H

host-collected trace data 7

I

IBM 3710 cluster controller, SYSPRINT sample report 236
INDEX
parameters 41
Information APARs xviii
INPUT
parameters 41
Internet, finding z/OS information online xx
IOH line trace 9
IP
data, line trace detail sample report 200
over frame-relay data, line trace detail 201
ISDN data, CSS adapter trace 178
IXPRT
GPT index report 23

K

keyboard
navigation 245
keyboard *(continued)*
PF keys 245
shortcut keys 245

L

LAN
line trace reports description 187–189
line trace reports overview 187
LAN line trace report (NTPRT) 24
LCN
parameters 43
LDPRT
line trace detail report 25
license, patent, and copyright information 247
line trace
CSS 8
NCP 7
NTRI 9
NTRI IOH 9
running the NCP 10
summary reports description 204, 205
summary reports overview 204
line trace detail report (LDPRT) 25
line trace detail reports
description 192–195
overview 192
line trace summary report (LSPRT) 25
LINECNT
parameters 43
LINENODE
line trace data 48
parameter 48
LLN
parameters 43
LOGADDR
parameters 44
LONGPIU
parameters 44
LSPRT
line trace summary report 25
LUNAME
network address cross-reference report description 209, 210
network address cross-reference report overview 209
network address cross-reference sample report 210
LUNAME cross-reference report (LUPRT) 26
LUPRT
LUNAME cross-reference report 26

M

mainframe
education xviii
messages 57

N

navigation
keyboard 245
NCP
generalized PIU trace 12
line trace data, SNA summary sample report 228

NCP *(continued)*
running the line trace 10
running the transmission group trace 11
transmission group trace 11
NCP line trace
running 10
NCP line trace data, line trace detail sample report 202
NCP-collected line trace data on duplex lines 4
NCPNAME
parameters 45
NEPRT
network error report (NEPRT) 27
NETCTLR trace data 47
network data traffic
report description 211
report overview 210
network data traffic report (DTPRT) 26
network error report
description 212
overview 212
network error report (NEPRT) 27
network error report sample 212
NMVTs, buffer trace capture 13
NODE parameter 46
node parameters
BFFRNODE 47
CTLRNODE 47
LINENODE 48
NODE 46
notes 45
RRSUP 48
NPPRT
X.25 line trace report 30
NRF data, SYSPRINT sample report 236
NTO
data sample report 228
data, SNA detail sample report 216
NTPRT
LAN line trace report 24
NTRI
line trace data, line trace detail sample report 203
logical data, LAN line trace sample report 190
physical and IP data, LAN line trace sample report 191
NTRI line trace 9

O

output format dependencies 21
output report parameters 21

P

parameter conventions 21
parameter, report output 21
parameters
3746 Model 900 31
BFFRNODE 47
CHARCODE 34
CSATYPE 35
CTLRNODE 47
DLCI 40
GPTNODE 47
INDEX 41
parameters *(continued)*
INPUT 41
LCN 43
LINECNT 43
LINENODE 48
LLN 43
LOGADDR 44
LONGPIU 44
NCPNAME 45
node 45
NODE 46
RRSUP 48
S/EDATE 49
S/ETIME 49
PIU data sample report 173
PIU trace, NCP generalized 12
PIUs out of sequence
buffer save 13
prerequisite information xviii
PRINT parameter 29

R

report
CSS adapter trace report (CAPRT) 22
CSS line trace report (CSPRT) 23
DUMP parameter 28
frame-relay logical line trace summary report (FRPRT) 23
GPT index report (IXPRT) 23
GPT summary report (GSPRT) 24
LAN line trace report 24
line trace detail report (LDPRT) 25
line trace summary report (LSPRT) 25
LUNAME cross-reference report 26
network data traffic report (DTPRT) 26
network error report (NEPRT) 27
output parameters 21
PRINT parameter 29
SNA detail report (SDPRT) 27
SNA summary report (SSPRT) 27
summary report parameter 28
summary report parameters 28
VTAM internal trace report 29
X.25 line trace report 30
report format, output 21
report, session and conversation 3
reporting ACF/TAP data using record numbers 167
restrictions, ACF/TAP 3
RFC (request for comments)
accessing online xx
RRSUP
parameter 48

S

S/EDATE and S/ETIME
parameters 49
SOURCE parameters 51
START and END parameters 51
TIMEOUT parameters 52
TOSUP parameters 52
VIEW parameters 53

S/EDATE and S/ETIME *(continued)*
VIT parameters 53
VITSTR parameters 54
VITTYPE parameters 53
WRAP parameters 54
S/ETIME (and S/EDATE)
parameters 49
SOURCE parameters 51
START and END parameters 51
TIMEOUT parameters 52
TOSUP parameters 52
VIRE parameters 53
VIT parameters 53
VITSTR parameters 54
VITTYPE parameters 53
WRAP parameters 54
sample report
frame-relay logical data, line trace detail 197
frame-relay over token-ring data, line trace detail 200
frame-relay physical data, line trace detail 198
frame-relay physical with BNN data, line trace detail 198
frame-relay physical with BNN HPR data, line trace detail 199
IP data, line trace detail 200
IP over frame-relay data, line trace detail 201
NCP line trace data, line trace detail 202
NTRI line trace data, line trace detail 203
Token-ring with BNN HPR data, line trace 203
X.25 data, line trace detail 204
sample reports
ACF/TAP 167
communications line adapter PIU data SNA detail 214
CSP data, line trace summary 206
CSS adapter with ECB flag 175
CSS line trace 181
ESCON data, CSS adapter trace 175
ESS data, LAN line trace 189
ESS data, SYSPRINT 234
ESS line data, line trace summary 206
ESS line trace, line trace detail 196
FMH5, SNA detail 216
frame-relay data, CSS adapter trace 177
frame-relay data, SNA detail 215
frame-relay data, SNA summary 227
frame-relay data, SYSPRINT 235
frame-relay logical line trace summary 183
Frame-relay over token-ring data, LAN line trace 190
frame-relay physical data, line trace summary 207
frame-relay physical with BNN HPR data, line trace summary 208
frame-relay with BNN HPR data, SNA detail 216
frame-relay with BNN HPR data, SNA summary 227
GPT index report 185
GPT summary 187
IBM 3710 cluster controller, SYSPRINT 236
ISDN data, CSS adapter trace 178
LUNAME network address cross-reference sample report 210
NCP line trace data, SNA summary 228
network error report 212
NRF data, SYSPRINT 236
NTO data 228
NTO data, SNA detail 216
sample reports *(continued)*
NTRI logical data, LAN line trace 190, 191
PIU data 173
SDLC with BNN HPR data 229
SDLC with BNN HPR data, SNA detail 217
TG trace data, SNA summary 229
TIC data, SYSPRINT 237
token-ring data, CSS adapter trace 179
token-ring with BNN HPR data, LAN line trace 191
token-ring with BNN HPR data, SNA detail 218
token-ring with BNN HPR data, SNA summary 230
VTAM buffer data (alternate), SNA summary 230
VTAM buffer trace confidential data, SYSPRINT 239
VTAM buffer trace data (alternate), SNA detail 218
VTAM buffer trace data (alternate), SYSPRINT 238
VTAM buffer, SYSPRINT 239
VTAM full buffer trace data (LONGPIU=YES), network data traffic 211
VTAM full buffer trace data (LONGPIU=YES), SNA detail 220
VTAM internal trace sample report 242
VTAM network full buffer trace data, SYSPRINT 241
X.25 data, line trace summary 208
X.25 data, SYSPRINT 242
X.25 line trace sample report 244
scanner interface trace 14
SDLC
with BNN HPR data sample report 229
with BNN HPR data, SNA detail sample report 217
SDPRT
SNA detail report (SDPRT) 27
session index 3
session report 3
shortcut keys 245
SIT trace 16
SNA detail report (SDPRT) 27
SNA detail reports
description 213, 214
overview 212
SNA summary report (SSPRT) 27
SNA summary reports
description 221–226
overview 220
softcopy information xviii
SOURCE parameter 51
SSPRT
SNA summary report (SSPRT) 27
START and END parameters 51
summary of changes xxiii
summary report parameter 28
summary report parameters 28
SUMMARY values and results 231
syntax diagram, how to read xvi
SYSPRINT reports
description 232, 233
overview 231
SYSPRINT/SYSLST
DUMP parameter 28
PRINT parameter 29
summary report parameter 28
summary report parameters 28

T

TCP/IP
    online information xx
Technotes xviii
TG trace data, SNA summary sample report 229
TIC data, SYSPRINT sample report 237
TIC internal trace 14, 16
TIMEOUT parameter 52
token-ring
    with BNN HPR data, line trace sample report 203
    with BNN HPR data, SNA detail sample report 218
    with BNN HPR data, SNA summary sample report 230
token-ring data, CSS adapter trace sample report 179
token-ring with BNN HPR data, LAN line trace sample report 191
TOSUP parameter 52
trace data
    ACF/TAP 1
    and control parameters 5
    duplex lines 4
    facilities 1
    gathering 5
    NCP-collected line 4
    not processed by ACF/TAP 2
    processed by ACF/TAP 1
    references and output reports 3
trace data, host-collected 7
trace facilities 1
trademark information 250
transmission group trace
    NCP 11
    running the NCP 11

U

unite trace, running generalize path information unit 13
user interface
    ISPF 245
    TSO/E 245

V

VIEW parameter 53
VIT parameters 53
VITSTR parameter 54
VITTYPE parameter 53
VTAM
    buffer contents trace 13
    buffer data (alternate), SNA summary sample report 230
    buffer lease verification 13
    buffer save on PIUs that are out of sequence 13
    buffer trace capture of NMVTs 13
    buffer trace confidential data, SYSPRINT sample report 239
    buffer trace data (alternate), SNA detail sample report 218
    buffer trace data (alternate), SYSPRINT sample report 238
    buffer, SYSPRINT sample report 239
    full buffer trace data (LONGPIU=YES), network data traffic sample report 211
VTAM *(continued)*
    full buffer trace data (LONGPIU=YES), SNA detail sample report 220
    internal trace report description 242
    internal trace report overview 242
    internal trace sample report 242
    network full buffer trace data, SYSPRINT sample report 241
    running the buffer contents trace 14
    trace operation 11, 13, 16
VTAM internal trace report (VTPRT) 29
VTAM, online information xx
VTPRT
    VTAM internal trace report 29

W

WRAPparameter 54

X

X.25
    data, line trace detail sample report 204
    data, line trace summary sample report 208
    data, SYSPRINT sample report 242
    line trace report description 243, 244
    line trace report overview 243
    line trace sample report 244
X.25 line trace report (NPPRT) 30

Z

z/OS Basic Skills Information Center xviii
z/OS, documentation library listing 251

Product Number: 5655-ZOS

GC27-3645-70